MODEL:	REV:	CHANGE LIST:
Z01 MotherBoard	1A	FIRST RELEASE
	1B	PAGE02. 1. R447,455,456 MODIFY to EP P/N:CS14752FB11 PAGE03. 1. STUFF HOLE6 P/N:FBZ01007010 , 2. STUFF HOLE7,8,15 P/N:FBED8001016 , 3. STUFF HOLE5 P/N:FBZ01006010 PAGE03. 1. STUFF HOLE23,25 P/N:FBZ01003010 , 2. STUFF HOLE18 P/N:FBZ01004010 , 3. STUFF HOLE31 P/N:FBZ01005010 PAGE05. 1. U22 MODIFY to GM965 P/N:AJ0QN120T04 , 2. R193,194 MODIFY to EP P/N:CS03902FB11 PAGE06. 1. R242 MODIFY to EP P/N:CS33002JB23 PAGE08. 1. L52,53 MODIFY to EP P/N:CV01004KN00 PAGE11. 1. R332 MODIFY to EP P/N:CS23243F930 , 2. U6 MODIFY to ICH8 P/N:AJ0QM740T03 PAGE12. 1. R244,R347,R353 MODIFY to EP P/N:CS00004JA40 , 2. L28 MODIFY to P/N:CV-1005MZ01 PAGE13. 1. CN10 MODIFY to CRT P/N:DFDS15FR611 PAGE15. 1. R467 MODIFY to EP P/N:CS00004JA40,2. R50 MODIFY to EP P/N:CS31003J941,3.CN27 MODIFY to SATA P/N:DFHS22FR005 PAGE16. 1. CN16 MODIFY to RJ45/11 P/N:DFTJ15FR057 PAGE18. 1. R317,323 MODIFY to 0603 P/N:CS31003F949 , 2. R310 MODIFY to EP P/N:CS31003J941 PAGE20. 1. PR100 MODIFY to EP P/N:CS51002FB11 PAGE21. 1. PR86 MODIFY to EP P/N:CS24022FB13 , 2. PR38,82 MODIFY to 1% P/N:CS31002FB26 , 3. PR83 MODIFY to EP P/N:CS00004JA40 PAGE22. 1. PR1 MODIFY to EP P/N:CS32002FB29 , 2. PR6 MODIFY to 1% P/N:CS51003F934 PAGE23. 1. PR106 MODIFY to 0 ohm P/N:CS00002JB38 , 2. UN-STUFF PR107,PC111 PAGE24. 1. PR29 MODIFY to EP P/N:CS31003J941 2. PJ1 MODIFY to BATTERY P/N:DFHD07MR006 PAGE25. 1. PR70 MODIFY to EP P/N:CS32002FB29
	2A	PAGE02. 1. Connect VDDIO_CLK to +1.25V 2. un-stuff R292;R445;R308 3. stuff C575,C574,C576,C578,C573,C546 for EMI issue PAGE06. 1. Connect ICH_PWROK SIGNAL TO NB CLPWROK 2.un-stuff R242;R235;R422;R222;R421;R423 3. R360,R361 only stuff for UMA PAGE07. 1. MODIFY 22u to 10u PAGE08. 1. R489 MODIFY to 0805 2. Stuff L50;R182;C238 for EV@ (MXM) PAGE09. 1. Add PU for SMA_MA14 : SMB_MA14 PAGE10. 1. un-stuff R337,C115,C127,C129,C298,C302,C294,C283,C291 PAGE11. 1. Q18 MODIFY to P/N:AL07SZ04C27 2.R395 connect to VCCRTC 3.R336;R251;R419;R255 un-stuff 4.R226 connect to +3V_S5 5.ICH_PWROK to SB CLPWROK PAGE11. 1. stuff C500,C509,C300,C513 33pF P/N:CH03306JB04 2. C507,C508 10pF change to 15pF P/N:CH01506JB06 , 3. stuff R238,R392,C2989 for Contr-LINK1 PAGE12. 1. VCCHDA & VCCSUSHDA change to 3V PAGE13. 1. ADD CRT DDC IN PU , 2. L8,L9,L10 P/N change to 0.47UH for MXM , 3. C22,C24,C25,C27,C31,C32 P/N change to 47pF for MXM PAGE14. 1. CN6 MODIFY CONN. to 5 PIN P/N:DFHD05MRD98 PAGE15. 1. MODIFY SWITCH BOARD PIN DEFINE 2. Modify FAN circuit , 2. MR1 P/N change to AL000268000 PAGE16. 1. C46,C47 27pF change to 33pF P/N:CH03306JB04 2. stuff C104,C105,C119,C112 0.1uF P/N:CH41003ZB35 PAGE17. 1. CARD READER COLAY TO CN28, DEL CN30 2. C311 change to 27pF P/N:CH02706JB06 3. stuff R209 4. un-stff R213,C325,U11 PAGE18. 1. CHANGE MDC & CODEC to 3V 2.Delete D12 3. stuff R314,R483,C393,C595 PAGE19. 1. SWAP NBSWON# & ACIN 2. C363,C364 5.6pF change to 18pF P/N:CH01806JB07 PAGE20. 1. Modify PQ19 P/N PAGE21. 1. Modify Capacitor P/N to meet ME height limit PAGE22. 1. stuff PR74,PC69 2. Remove JP Pad PAGE23. 1. stuff PR126,PC131,PC137 2. Remove JP Pad 3. un-stuff +1.8V PAGE25. 1. un-stuff PR101,PQ21,PR22,PQ2,PR26,PR9,PR5,PC33,PC38,PC39,PC19,PC22,PU2
	2B	PAGE02. 1. Change R293 to 2.2K for meet Intel Design checklist PAGE03. 1. Change XDP PU/PD resistors value to meet Intel Design checklist PAGE04. 1. Un-stuff C28,C457 PAGE05. 1. Add LVDS VREF strap PAGE06. 1. Add SDVO I2C strap PAGE07. 1. Remove NB resistors to GND PAGE08. 1. Remove DIODE for D27 2. Remove VCCA_DPLLA&B for external VGA PAGE10. 1. Add CRT & LVDS I2C Strap PAGE11. 1. Un-stuff Control Link Vref1 PAGE12. 1. Remove reserve ICH8 HDA 1.5V power rail PAGE13. 1. Modify LCD VCC enable power rail 2. Add LVDS INV I2C Strap PAGE14. 1. Add EMI solution for debug port PCI clock PAGE15. 1. Change Q33,Q34 to MOSFET PAGE16. 1. Add PIN 59 & 3 PAGE18. 1. Change CN31 pin2 to +3V_S5 for Modem can't wake up from S3 PAGE19. 1. Add GPIO46 , 47 PAGE20~25. 1. Add EMI solution 2. Update Power component P/N
	3A	PAGE10. 1. Add +2.5V & +1.8V capacitors for nVIDIA MXM card PAGE11. 1. Change C507,C508 to 15pF for RTC PAGE13. 1. Add C609 & C610 to meet CM2009 specification PAGE14. 1. Reserve +5VPCU & Add Q40,R540 for CIR PAGE15. 1. Add C611 for PLC hall IC 2. Stuff R60 for G995 PAGE19. 1. CN24 un-stuff , 2. D322,D332 reserve for ESD PAGE21. 1. Modify PC85 value PAGE22. 1. Modify PR4,PC13 value for sequence PAGE23. 1. Add PQ22 for nVIDIA MXM +1.8V PAGE24. 1. Modify PF1 P/N PAGE25. 1. Add PU2 for nVIDIA MXM +2.5V
	3B	PAGE10. 1. Remove R337 & Add R542,Q41,Q42 for Nvidia ACIN function PAGE13. 1. Add D34~D36,D40 for ESD solution PAGE15. 1. R484,R485,R486 from 330 change to 220 ohm for LED light issue 2. Add D41,D42,D43 for ESD 3. Stuff Q39 PAGE16. 1. Add C621,C622 for EMI solution 2. C112,C119 change to 100pF/50V for EMI PAGE18. 1. Un-Stuff L55, Stuff U16,R470,R471 for internal Mic. issue PAGE19. 1. Modify D32,D33 package to 0402 for ESD PAGE23. 1. Add PR140,PR141 for +1.8V voltage PAGE25. 1. Stuff PR22,PR101,PQ2,PQ21 for nVIDIA MXM +1.8V & +2.5V Discharge

MODEL : Z01 MB

PAGE	FROM	TO
1	1A	
2	2B	
3	2B	
4	2B	
5	2B	
6	2B	
7	2B	
8	2B	
9	2A	
10	3A	3B
11	2B	
12	2B	
13	3A	3B
14	3A	
15	3A	3B
16	3A	3B
17	2A	
18	2B	3A
19	3A	3B
20	2B	
21	3A	
22	3A	
23	3A	3B
24	3A	
25	3A	3B

Quanta Computer Inc.	PROJECT : Z01	APPROVE BY: JIM HSU	DRAWING BY:JACKY CHENG	REV 3A
	MB ASSY'S P/N : 31Z01MB00XX	PROJECT LEADER: JIM HSU	DOCUMENT NO: 204	DATE :2007/04/14

COVER SHEET 1 OF 1

Z01 SYSTEM BLOCK DIAGRAM

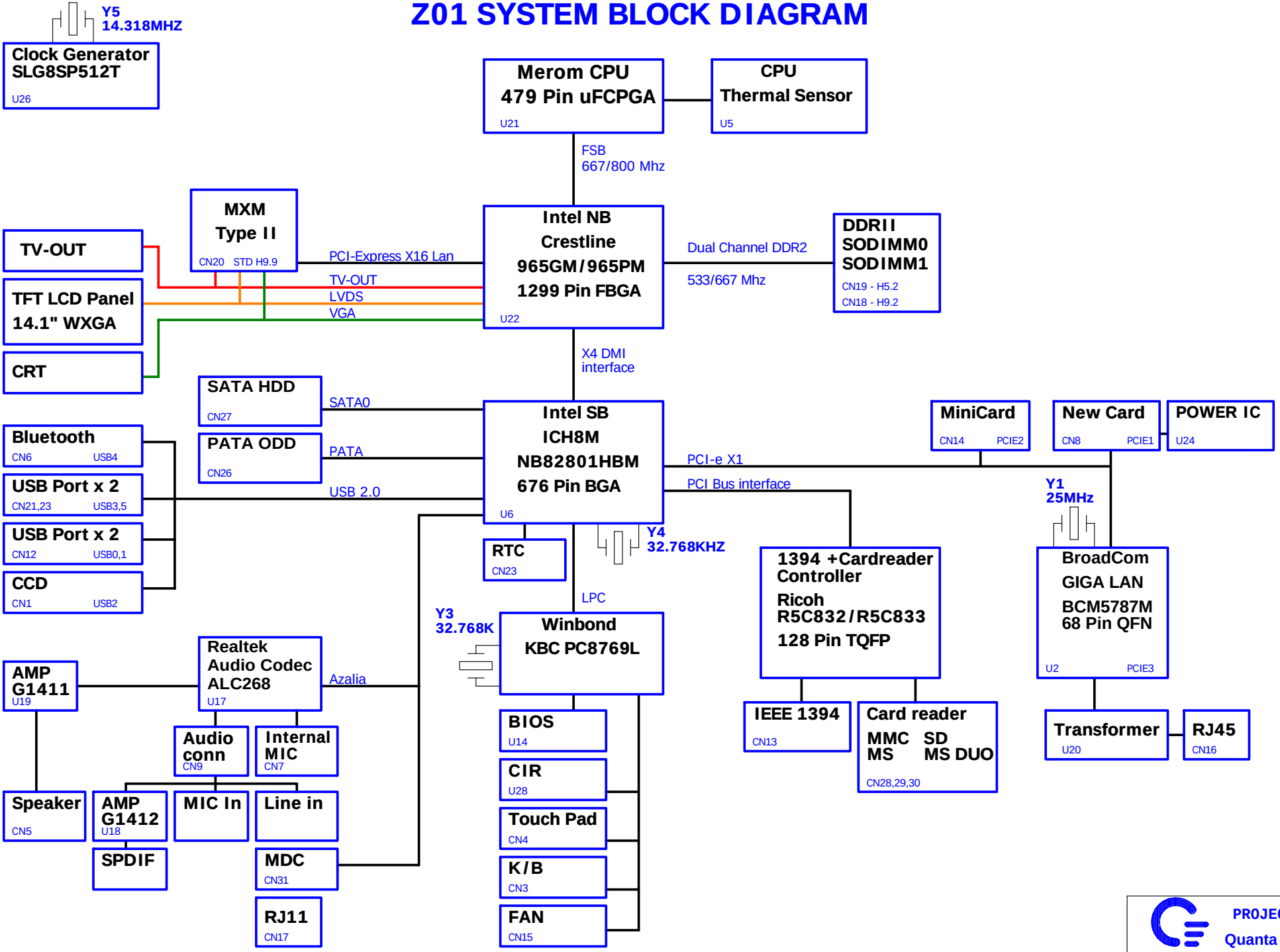

PROJECT : Z01

Quanta Computer Inc.

Size	Document Number	Rev
	Block Diagram	1A

Date: Thursday, May 17, 2007 Sheet 2 of 26

Clock Generator

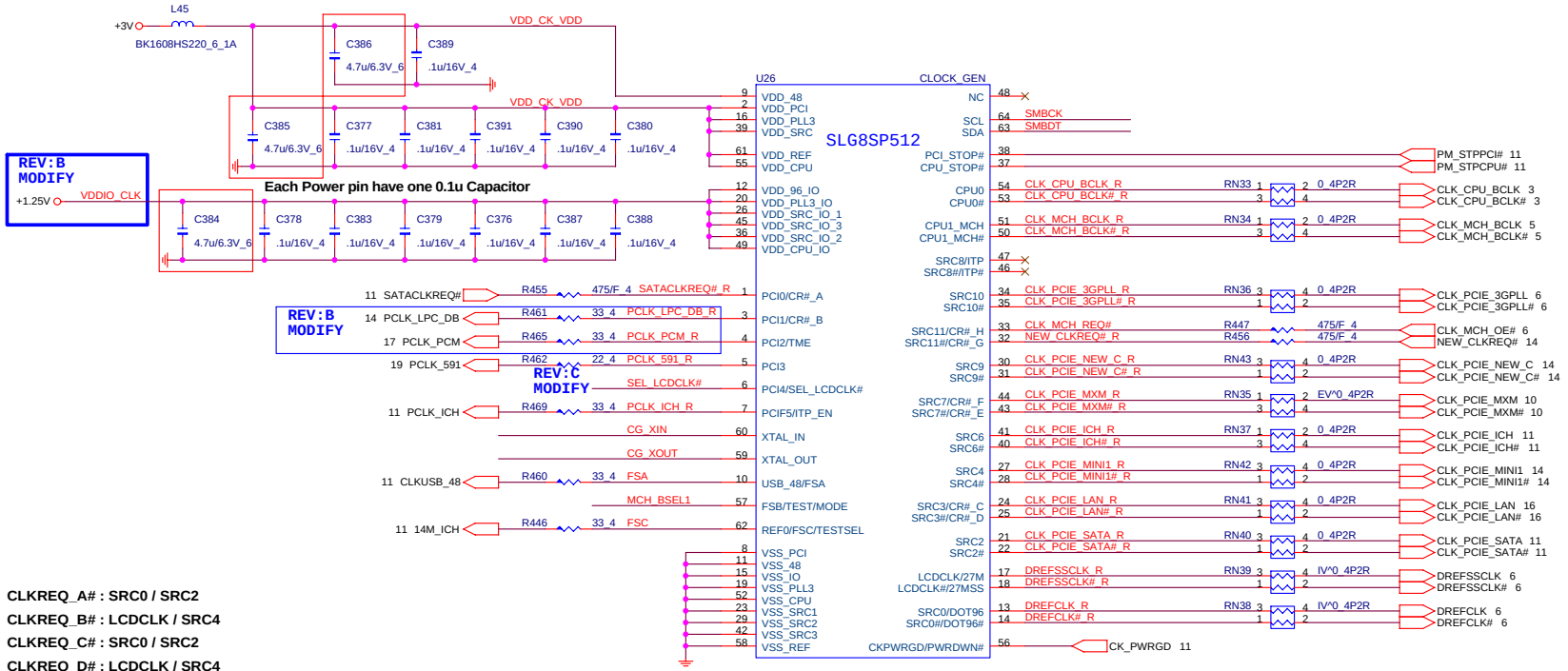

CLKREQ_A# : SRC0 / SRC2
CLKREQ_B# : LCDCLK / SRC4
CLKREQ_C# : SRC0 / SRC2
CLKREQ_D# : LCDCLK / SRC4
CLKREQ_E# : SRC6
CLKREQ_F# : SRC8
CLKREQ_G# : SRC9
CLKREQ_H# : SRC10

SLG8SP512T: AL8SP512K05

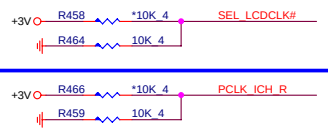

CK505
0 : Pin 37,38 as SRC5 output
1 : pin 37,38 as PCI_STOP & CPU_STOP

SILEGO
0 : Pin 13,14 & 17,18 for Internal VGA
1 : 27M & 27M_SS & SRC0 for external VGA

CK505
0 : Pin 46,47 as SRC output
1 : Pin 46,47 as CPU output

SILEGO
0 : Pin 46,47 as SRC output
1 : Pin 46,47 as CPU output

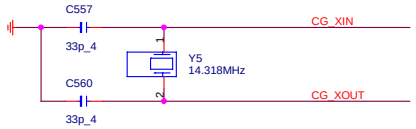

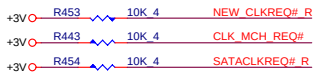

PU for ICS CLK GEN
0 : CPU & SRC overclock allow
1 : CPU & SRC overclock not allow

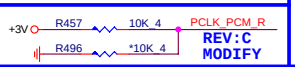

Clock Gen I2C

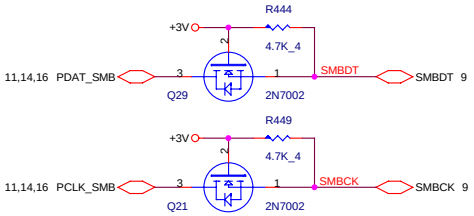

Reserved for EMI

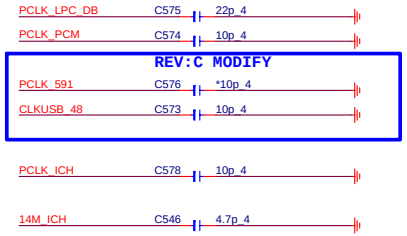

CPU Clock select

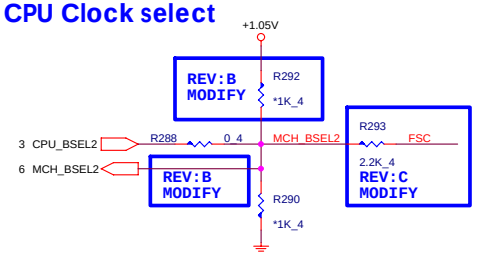

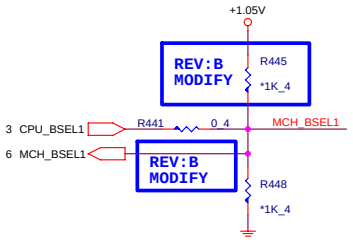

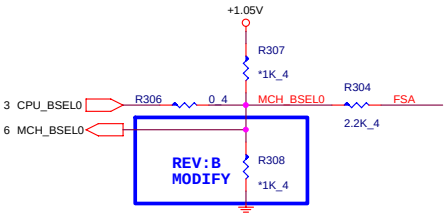

BSEL Frequency Select Table

FSC	FSB	FSA	Frequency
0	0	0	266Mhz
0	0	1	133Mhz
0	1	0	200Mhz
0	1	1	166Mhz
1	0	0	333Mhz
1	0	1	100Mhz
1	1	0	400Mhz
1	1	1	Reserved

PROJECT : ZO1
Quanta Computer Inc.

Size	Document Number	Rev
	CLOCK GENERATOR CK505 W/REGULATOR	2B

Date: Thursday, May 17, 2007 Sheet 3 of 26

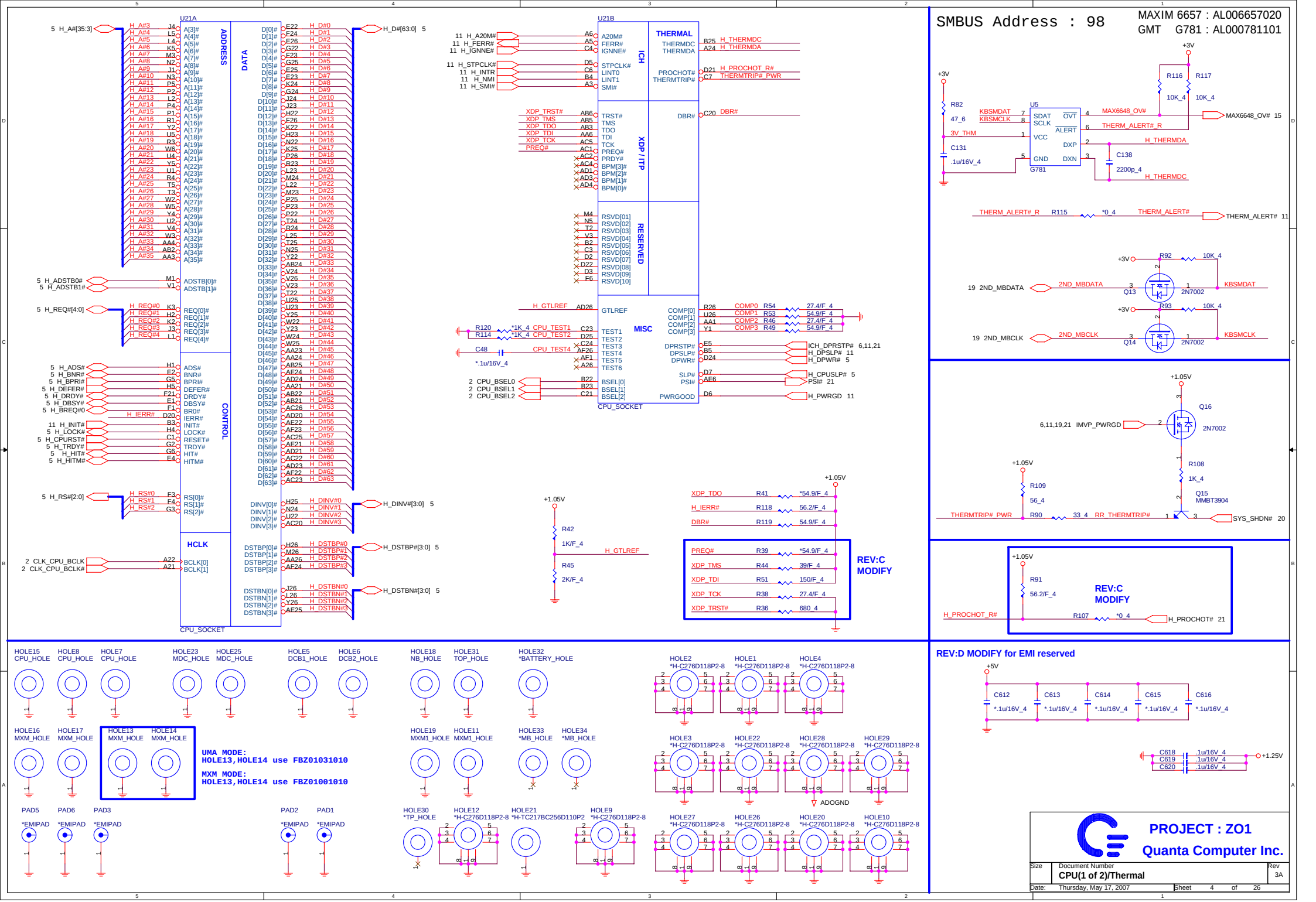
U21A
ADDRESS
DATA
CONTROL
HCLK
CPU_SOCKET
U21B
THERMAL
ICH
XDP / ITP
RESERVED
MISC
CPU_SOCKET
SMBUS Address : 98
MAXIM 6657 : AL006657020
GMT G781 : AL000781101
U5
G781
Q13
Q14
Q16
Q15
MMBT3904
2N7002
REV:C MODIFY
REV:C MODIFY
REV:D MODIFY for EMI reserved
UMA MODE:
HOLE13,HOLE14 use FBZ01031010
MXM MODE:
HOLE13,HOLE14 use FBZ01001010
ADOGND
PROJECT : ZO1
Quanta Computer Inc.
Size
Document Number
CPU(1 of 2)/Thermal
Rev
3A
Date: Thursday, May 17, 2007
Sheet 4 of 26

CPU(Power)

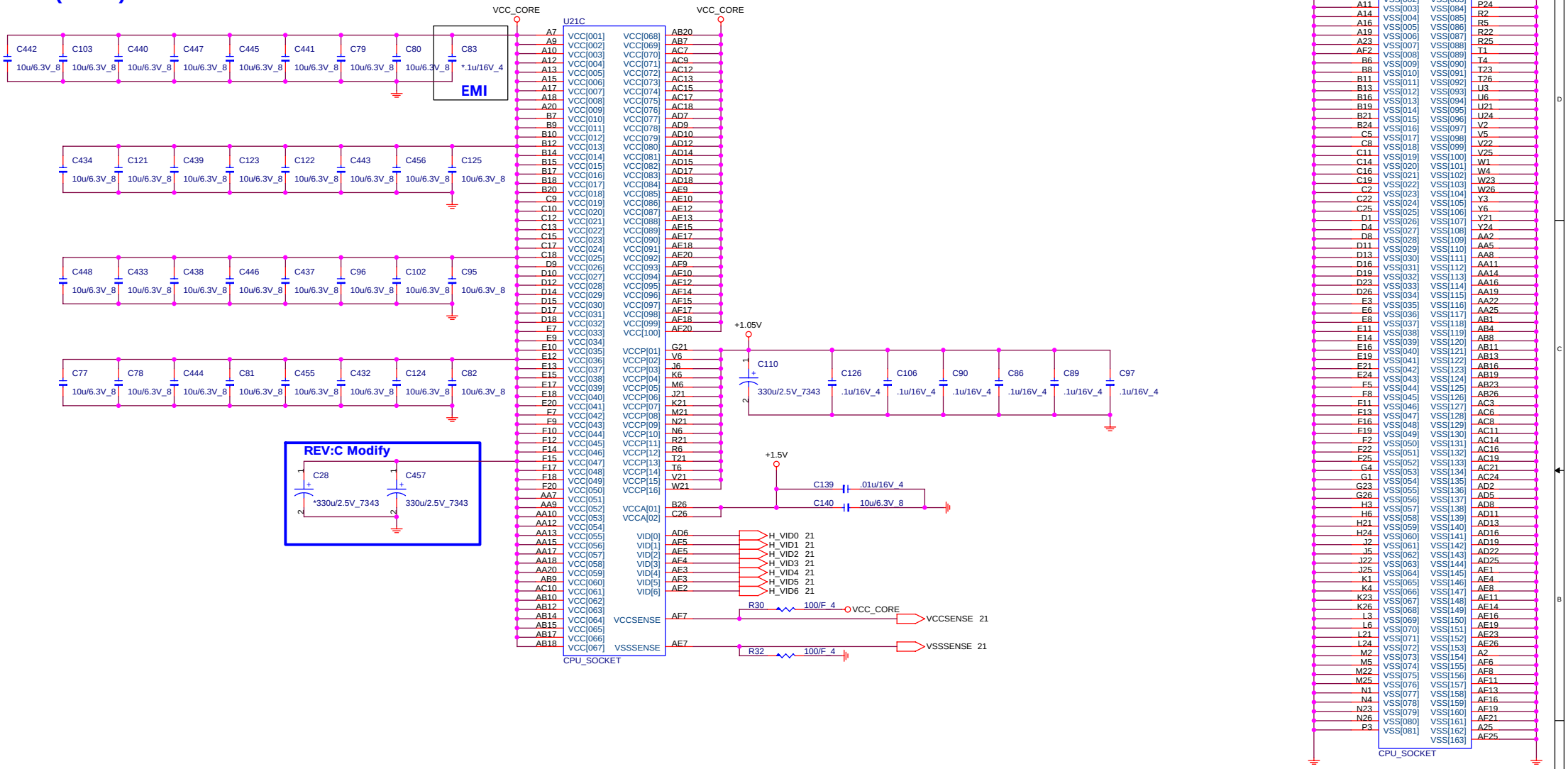

PROJECT : ZO1

Quanta Computer Inc.

Size	Document Number	Rev
	CPU(2 of 2)Power	2B

Date: Thursday, May 17, 2007 Sheet 5 of 26

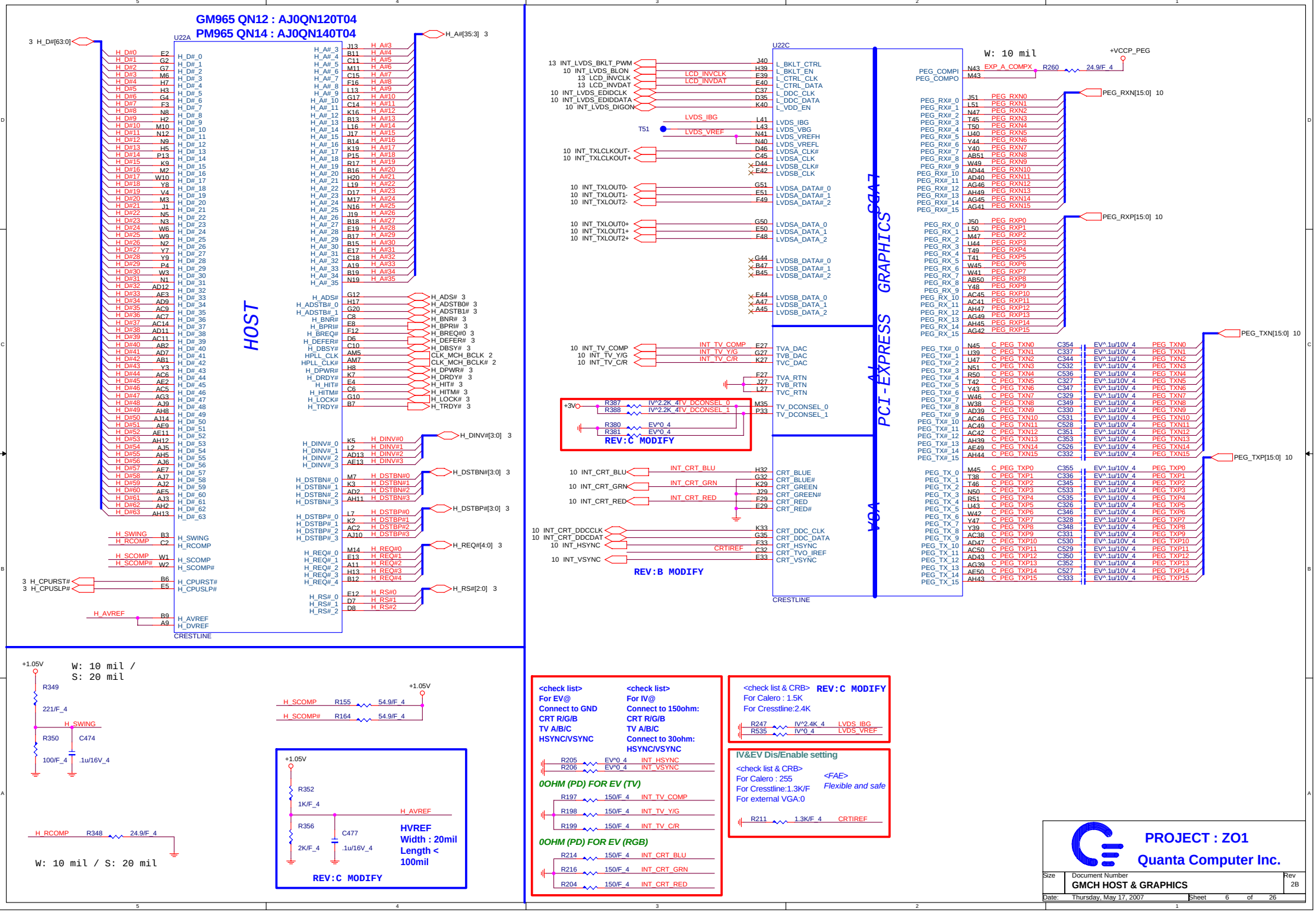
GM965 QN12 : AJ0QN120T04
PM965 QN14 : AJ0QN140T04
U22A
HOST
CRESTLINE
3 H_D#[63:0]
H_A#[35:3] 3
H_ADS# 3
H_ADSTB0# 3
H_ADSTB1# 3
H_BNR# 3
H_BPRI# 3
H_BREQ#0 3
H_DEFER# 3
H_DBSY# 3
CLK_MCH_BCLK 2
CLK_MCH_BCLK# 2
H_DPWR# 3
H_DRDY# 3
H_HIT# 3
H_HITM# 3
H_LOCK# 3
H_TRDY# 3
H_DINV#[3:0] 3
H_DSTBN#[3:0] 3
H_DSTBP#[3:0] 3
H_REQ#[4:0] 3
H_RS#[2:0] 3
H_SWING
H_RCOMP
H_SCOMP
H_SCOMP#
3 H_CPURST#
3 H_CPUSLP#
H_CPURST#
H_CPUSLP#
H_AVREF
H_DVREF
+1.05V
W: 10 mil /
S: 20 mil
R349
221/F_4
R350
100/F_4
C474
.1u/16V_4
H_RCOMP
R348
24.9/F_4
W: 10 mil / S: 20 mil
H_SCOMP
R155
54.9/F_4
H_SCOMP#
R164
54.9/F_4
R352
1K/F_4
R356
2K/F_4
C477
.1u/16V_4
HVREF
Width : 20mil
Length < 100mil
REV:C MODIFY
U22C
13 INT_LVDS_BKLT_PWM
10 INT_LVDS_BLON
13 LCD_INVCLK
13 LCD_INVDAT
10 INT_LVDS_EDIDCLK
10 INT_LVDS_EDIDDATA
10 INT_LVDS_DIGON
LCD_INVCLK
LCD_INVDAT
LVDS_IBG
LVDS_VREF
T51
10 INT_TXLCLKOUT-
10 INT_TXLCLKOUT+
10 INT_TXLOUT0-
10 INT_TXLOUT1-
10 INT_TXLOUT2-
10 INT_TXLOUT0+
10 INT_TXLOUT1+
10 INT_TXLOUT2+
10 INT_TV_COMP
10 INT_TV_Y/G
10 INT_TV_C/R
INT_TV_COMP
INT_TV_Y/G
INT_TV_C/R
+3V
R387
R388
IV^2.2K_4
TV_DCONSEL_0
TV_DCONSEL_1
R380
R381
EV^0_4
REV:C MODIFY
10 INT_CRT_BLU
10 INT_CRT_GRN
10 INT_CRT_RED
INT_CRT_BLU
INT_CRT_GRN
INT_CRT_RED
10 INT_CRT_DDCCLK
10 INT_CRT_DDCDAT
10 INT_HSYNC
10 INT_VSYNC
CRTIREF
REV:B MODIFY
L_BKLT_CTRL
L_BKLT_EN
L_CTRL_CLK
L_CTRL_DATA
L_DDC_CLK
L_DDC_DATA
L_VDD_EN
LVDS_IBG
LVDS_VBG
LVDS_VREFH
LVDS_VREFL
LVDSA_CLK#
LVDSA_CLK
LVDSB_CLK#
LVDSB_CLK
LVDSA_DATA#_0
LVDSA_DATA#_1
LVDSA_DATA#_2
LVDSA_DATA_0
LVDSA_DATA_1
LVDSA_DATA_2
LVDSB_DATA#_0
LVDSB_DATA#_1
LVDSB_DATA#_2
LVDSB_DATA_0
LVDSB_DATA_1
LVDSB_DATA_2
TVA_DAC
TVB_DAC
TVC_DAC
TVA_RTN
TVB_RTN
TVC_RTN
TV_DCONSEL_0
TV_DCONSEL_1
CRT_BLUE
CRT_BLUE#
CRT_GREEN
CRT_GREEN#
CRT_RED
CRT_RED#
CRT_DDC_CLK
CRT_DDC_DATA
CRT_HSYNC
CRT_TVO_IREF
CRT_VSYNC
PCI-EXPRESS GRAPHICS
VGA
W: 10 mil
+VCCP_PEG
PEG_COMPI
PEG_COMPO
EXP_A_COMPX
R260
24.9/F_4
PEG_RXN[15:0] 10
PEG_RXP[15:0] 10
PEG_TXN[15:0] 10
PEG_TXP[15:0] 10
EV^.1u/10V_4
REV:C MODIFY
<check list>
For EV@
Connect to GND
CRT R/G/B
TV A/B/C
HSYNC/VSYNC
<check list>
For IV@
Connect to 150ohm:
CRT R/G/B
TV A/B/C
Connect to 30ohm:
HSYNC/VSYNC
R205
R206
EV^0_4
INT_HSYNC
INT_VSYNC
0OHM (PD) FOR EV (TV)
R197
R198
R199
150/F_4
INT_TV_COMP
INT_TV_Y/G
INT_TV_C/R
0OHM (PD) FOR EV (RGB)
R214
R216
R204
INT_CRT_BLU
INT_CRT_GRN
INT_CRT_RED
<check list & CRB>
REV:C MODIFY
For Calero : 1.5K
For Cresstline:2.4K
R247
R535
IV^2.4K_4
IV^0_4
LVDS_IBG
LVDS_VREF
IV&EV Dis/Enable setting
<check list & CRB>
For Calero : 255
For Cresstline:1.3K/F
For external VGA:0
<FAE>
Flexible and safe
R211
1.3K/F_4
CRTIREF
PROJECT : ZO1
Quanta Computer Inc.
Size
Document Number
GMCH HOST & GRAPHICS
Rev
2B
Date: Thursday, May 17, 2007
Sheet 6 of 26

All strap are sampled with respect to the leading edge of the GMCH PWROK Signal
CFG[17:3] Have internal Pull-up
CFG[18:19] Have internal Pull-down
Any CFG signal strapping option not list below should be left NC Pin

CFG[2:0]	FSB Frequency Select	001 = FSB 533 MHz 010 = FSB 800 MHz 011 = FSB 667 MHz
CFG[4:3]	Reserved	
CFG5	DMI X2 Select	0 = DMI X2 1 = DMI X4(Default)
CFG6	Reserved	
CFG7	CPU Strap	0 = Reserved 1 = Mobile CPU(Default)
CFG8	Low power PCI Express	0 = Normal mode 1 = Low Power mode
CFG9	PCI Express Graphics Lane Reversal	0 = Reverse Lanes 1 = Normal operation(Default)
CFG[11:10]	Reserved	
CFG[13:12]	XOR/ALLZ	00 = Reserved 01 = XOR Mode Enable 10 = All-Z Mode Enabled 11 = Normal operation(Default)
CFG[15:14]	Reserved	
CFG16	FSB Dynamic ODT	0 = Dynamic ODT disable 1 = Dynamic ODT Enable(Default)
CFG[18:17]	Reserved	
CFG18	VCC select	0 = 1.05V (Default) 1 = 1.5V
SDVO_CTRLDATA	SDVO Present	0 = No SDVO Card present(Default) 1 = SDVO Card Present
CFG19	DMI Lane Reversal	0 = Normal operation(Default) 1 = Reverse Lanes
CFG20	SDVO/PCIe concurrent	0 = Only SDVO or PCIE x1 is operation(Default) 1 = SDVO and PCIE x1 are operating simultaneously via the PEG port

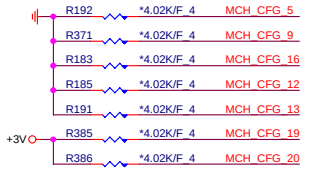

GM965 QN12 : AJ0QN120T04
PM965 QN14 : AJ0QN140T04

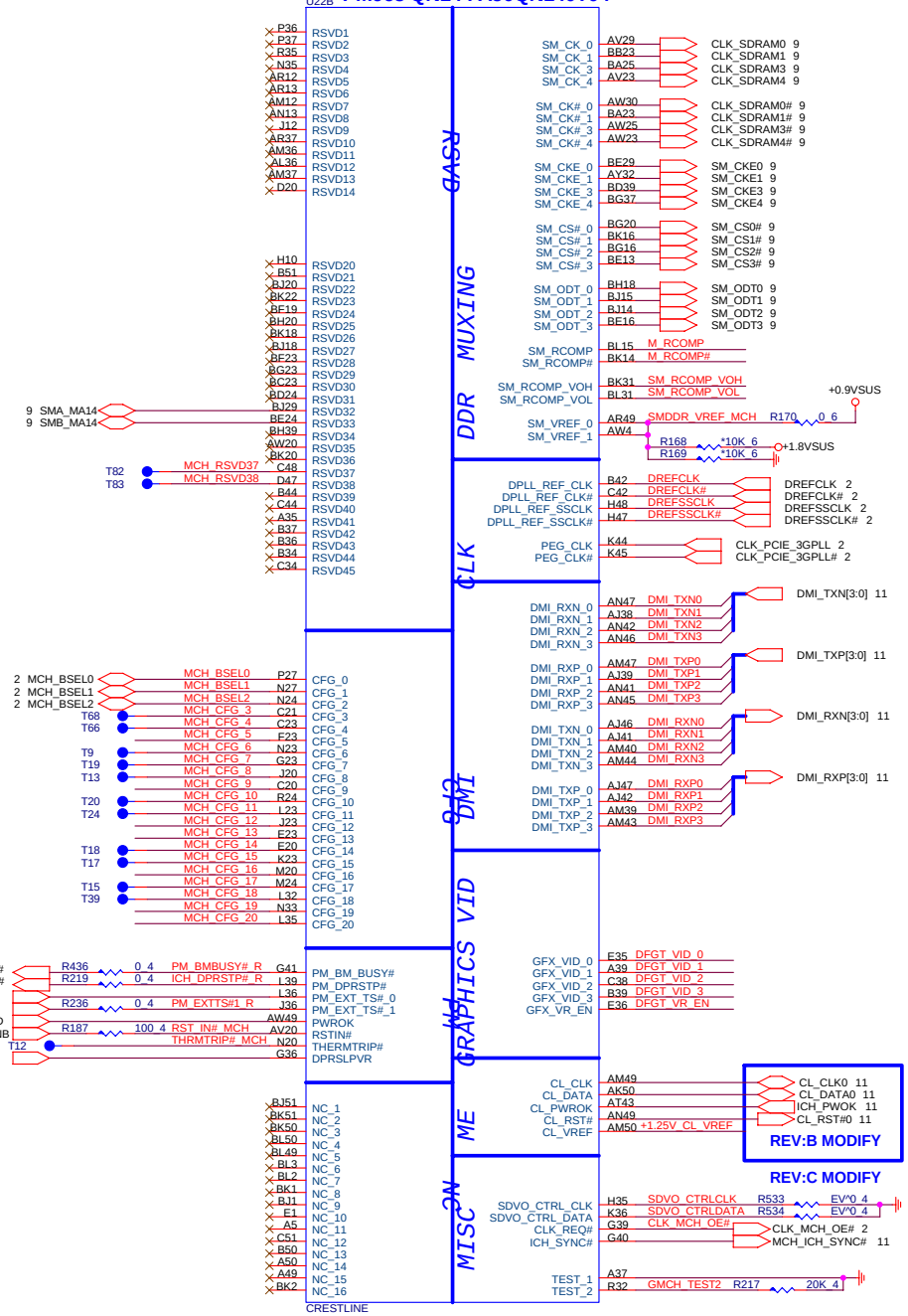

Width : 20mil
Length < 500mil

<check list & CRB>
R Value select
For Calero : 80.6ohm
For Cresstline:20ohm
But check list use 80.6ohm

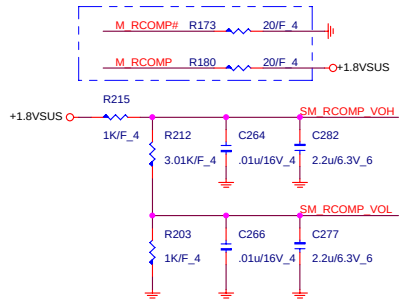

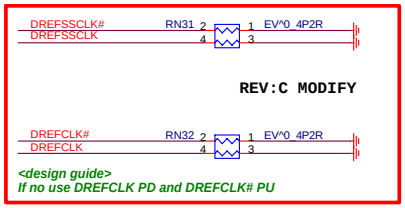

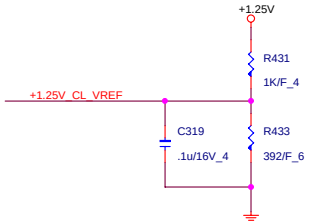

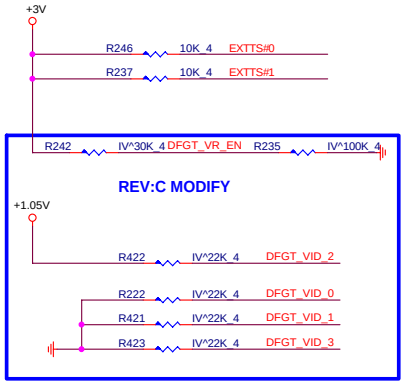

PROJECT : ZO1

Quanta Computer Inc.

Size	Document Number	Rev
	GMCH DMI & STRAP	2B

Date: Thursday, May 17, 2007 Sheet 7 of 26

GM965 QN12 : AJ0QN120T04
PM965 QN14 : AJ0QN140T04

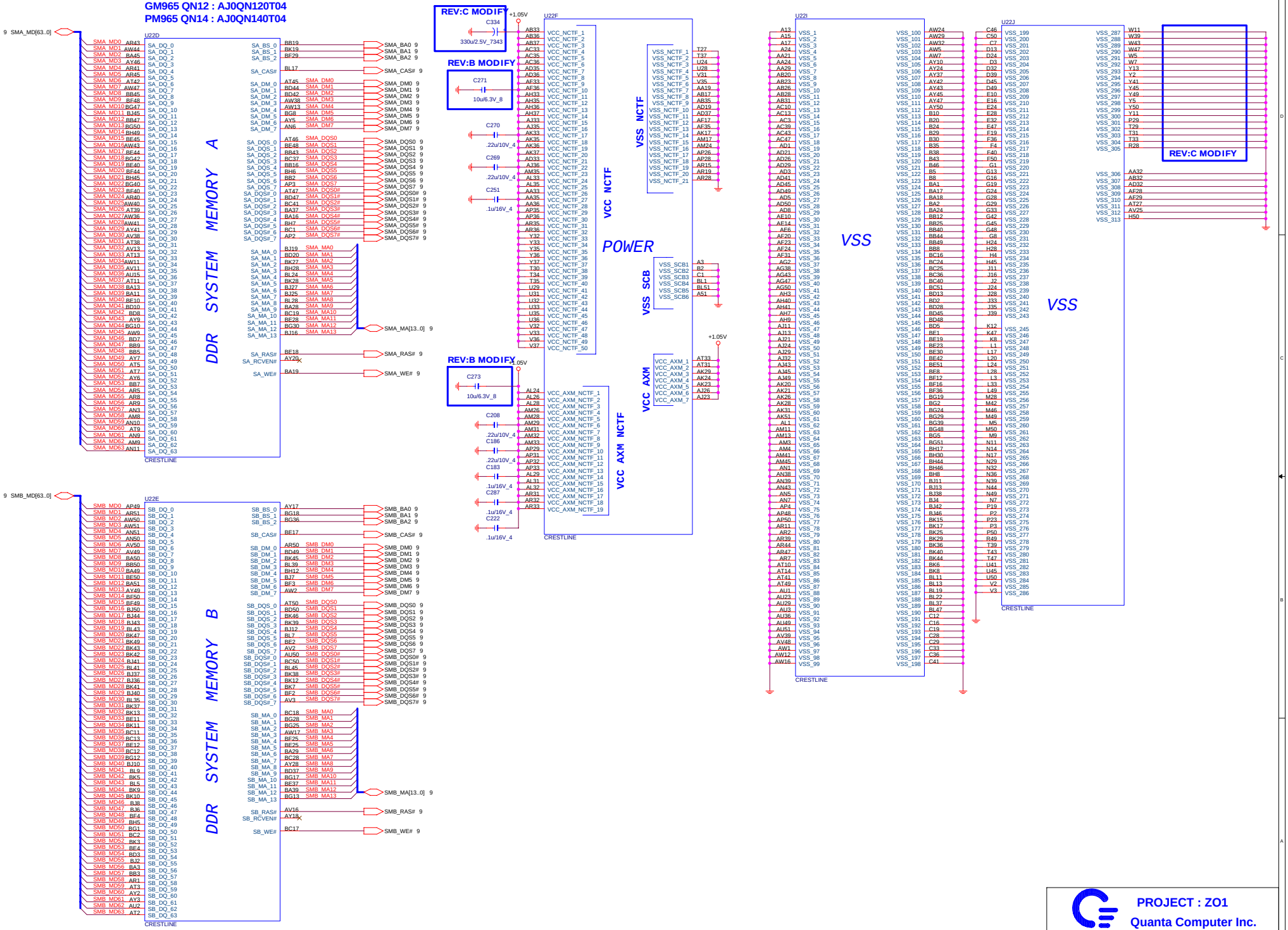

PROJECT : ZO1

Quanta Computer Inc.

Size	Document Number	Rev
	GMCH DDR & GND	2B

Date: Thursday, May 17, 2007 Sheet 8 of 26

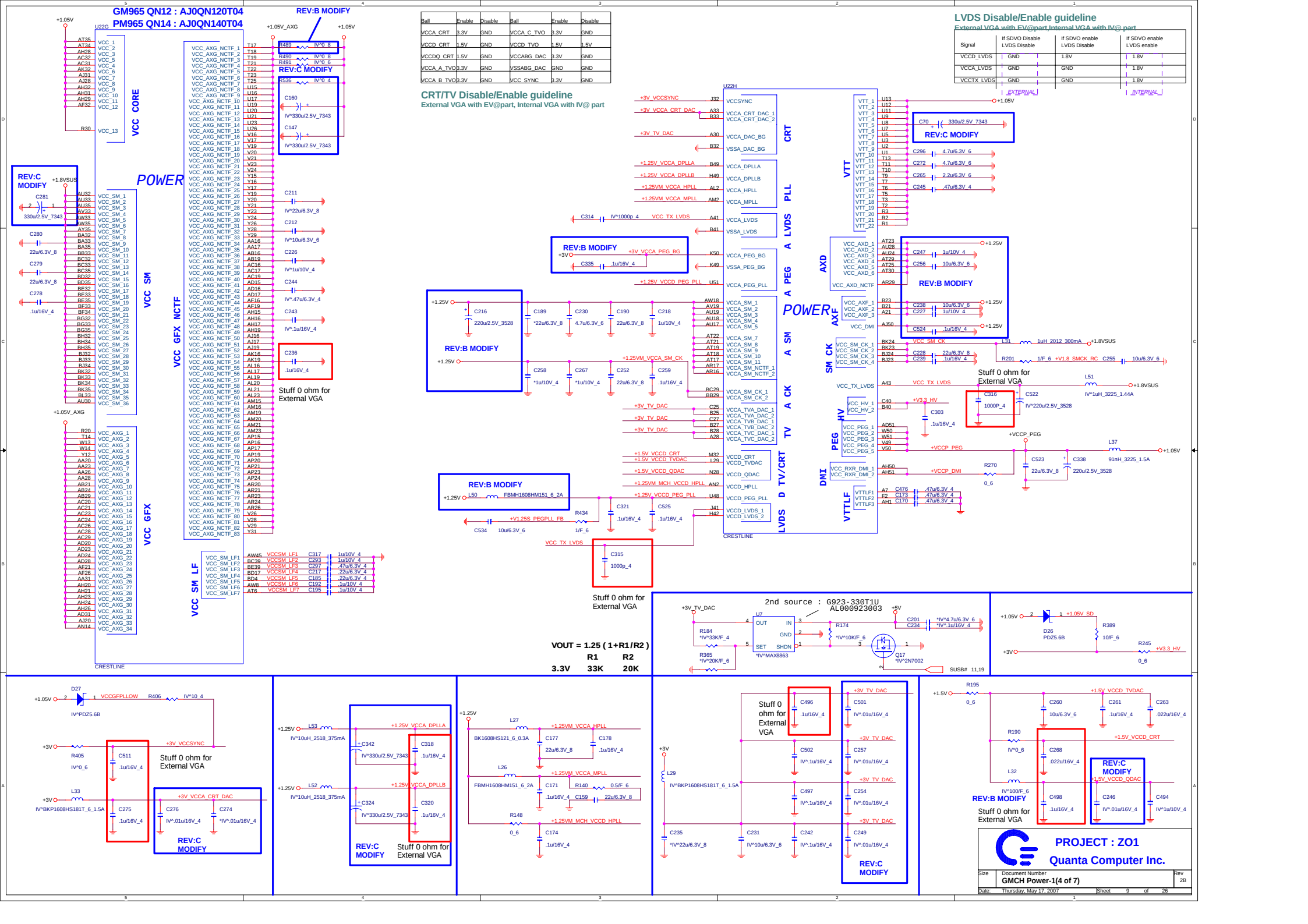

Ball	Enable	Disable	Ball	Enable	Disable
VCCA_CRT	3.3V	GND	VCCA_C_TVO	3.3V	GND
VCCD_CRT	1.5V	GND	VCCD_TVO	1.5V	1.5V
VCCDQ_CRT	1.5V	GND	VCCABG_DAC	3.3V	GND
VCCA_A_TVO	3.3V	GND	VSSABG_DAC	GND	GND
VCCA_B_TVO	3.3V	GND	VCC_SYNC	3.3V	GND

CRT/TV Disable/Enable guideline

External VGA with EV@part, Internal VGA with IV@ part

LVDS Disable/Enable guideline

External VGA with EV@part,Internal VGA with IV@ part

Signal	If SDVO Disable LVDS Disable	If SDVO enable LVDS Disable	If SDVO enable LVDS enable
VCCD_LVDS	GND	1.8V	1.8V
VCCA_LVDS	GND	GND	1.8V
VCCTX_LVDS	GND	GND	1.8V
	EXTERNAL		INTERNAL

DDR2 SO-DIMM SOCKET

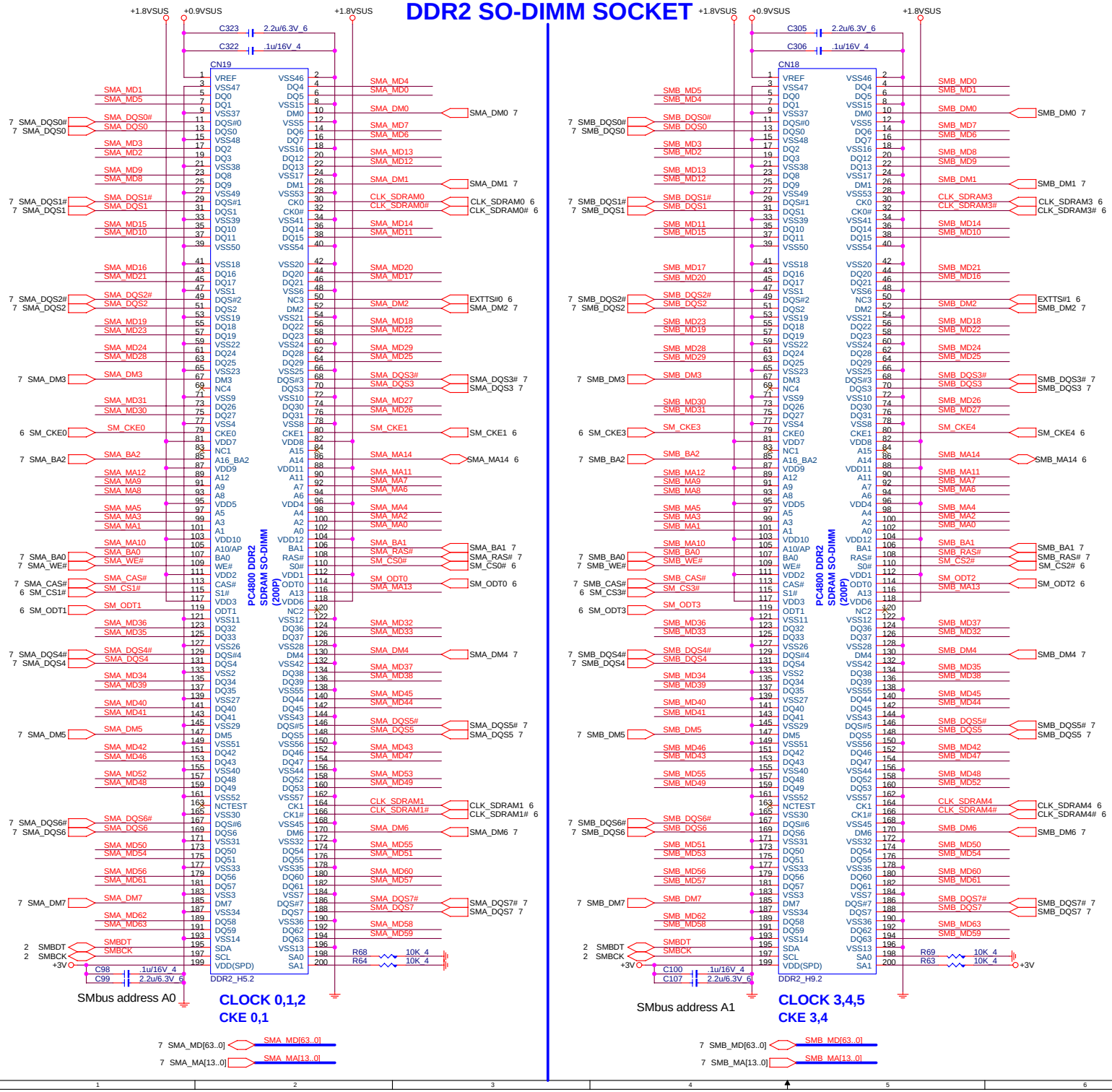

DDR2 TERMINATOR

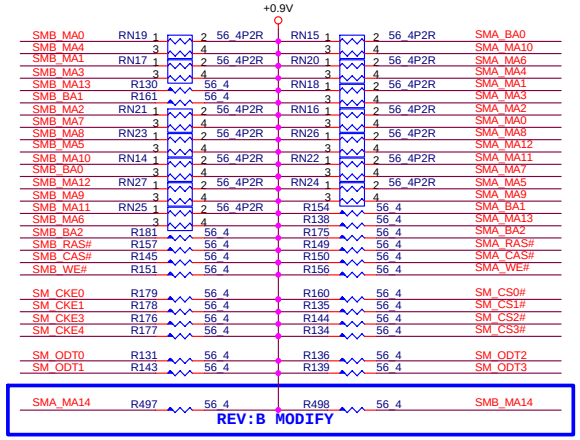

TERMINATOR DECOUPLING CAPACITOR

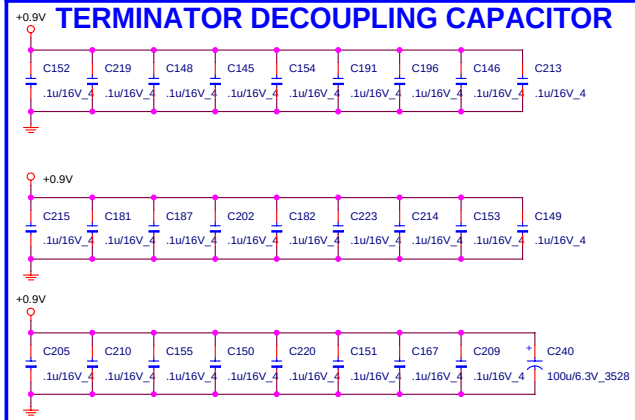

CLOSE SO-DIMM SOCKET CAPACITORS

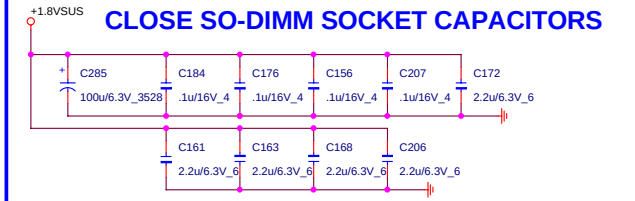

CLOSE SO-DIMM SOCKET CAPACITORS

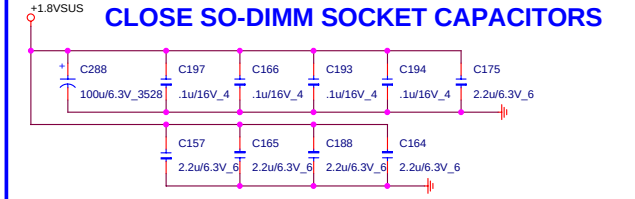

PROJECT : ZO1
Quanta Computer Inc.

Size	Document Number	Rev
	DDR SO-DIMM(200P)	2A

Date: Thursday, May 17, 2007 Sheet 10 of 26

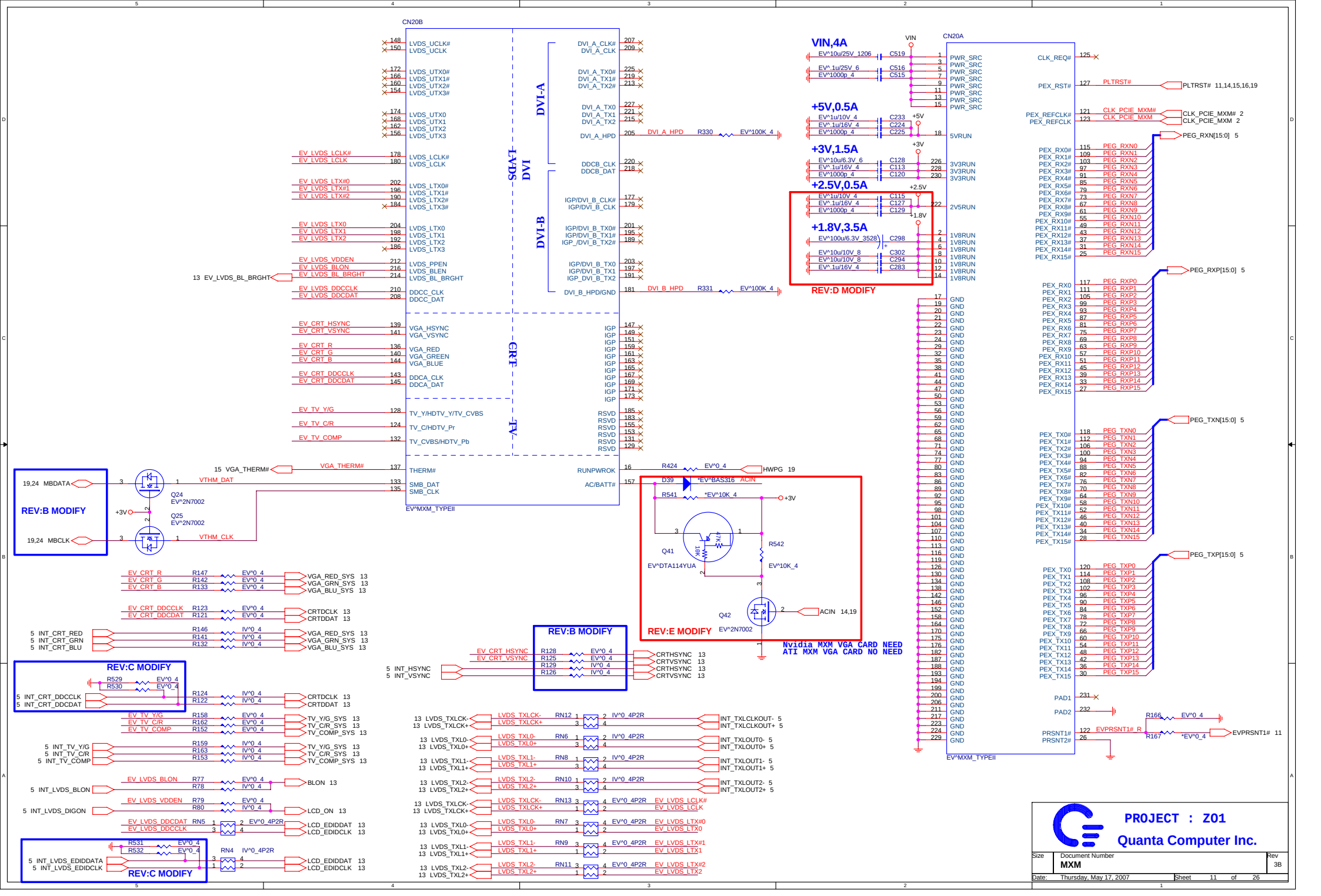
CN20B
LVDS_UCLK#
LVDS_UCLK
LVDS_UTX0#
LVDS_UTX1#
LVDS_UTX2#
LVDS_UTX3#
LVDS_UTX0
LVDS_UTX1
LVDS_UTX2
LVDS_UTX3
LVDS_LCLK#
LVDS_LCLK
LVDS_LTX0#
LVDS_LTX1#
LVDS_LTX2#
LVDS_LTX3#
LVDS_LTX0
LVDS_LTX1
LVDS_LTX2
LVDS_LTX3
LVDS_PPEN
LVDS_BLEN
LVDS_BL_BRGHT
DDCC_CLK
DDCC_DAT
VGA_HSYNC
VGA_VSYNC
VGA_RED
VGA_GREEN
VGA_BLUE
DDCA_CLK
DDCA_DAT
TV_Y/HDTV_Y/TV_CVBS
TV_C/HDTV_Pr
TV_CVBS/HDTV_Pb
THERM#
SMB_DAT
SMB_CLK
DVI_A_CLK#
DVI_A_CLK
DVI_A_TX0#
DVI_A_TX1#
DVI_A_TX2#
DVI_A_TX0
DVI_A_TX1
DVI_A_TX2
DVI_A_HPD
DDCB_CLK
DDCB_DAT
IGP/DVI_B_CLK#
IGP/DVI_B_CLK
IGP/DVI_B_TX0#
IGP/DVI_B_TX1#
IGP_/DVI_B_TX2#
IGP/DVI_B_TX0
IGP/DVI_B_TX1
IGP_DVI_B_TX2
DVI_B_HPD/GND
IGP
RSVD
RUNPWROK
AC/BATT#
DVI-A
DVI
DVI-B
LVDS
CRT
TV
EV^MXM_TYPEII
DVI_A_HPD R330 EV^100K_4
DVI_B_HPD R331 EV^100K_4
EV_LVDS_LCLK#
EV_LVDS_LCLK
EV_LVDS_LTX#0
EV_LVDS_LTX#1
EV_LVDS_LTX#2
EV_LVDS_LTX0
EV_LVDS_LTX1
EV_LVDS_LTX2
EV_LVDS_VDDEN
EV_LVDS_BLON
EV_LVDS_BL_BRGHT
13 EV_LVDS_BL_BRGHT
EV_LVDS_DDCCLK
EV_LVDS_DDCDAT
EV_CRT_HSYNC
EV_CRT_VSYNC
EV_CRT_R
EV_CRT_G
EV_CRT_B
EV_CRT_DDCCLK
EV_CRT_DDCDAT
EV_TV_Y/G
EV_TV_C/R
EV_TV_COMP
15 VGA_THERM#
VGA_THERM#
R424 EV^0_4 HWPG 19
D39 *EV^BAS316 ACIN
R541 *EV^10K_4
+3V
Q41
EV^DTA114YUA
R542
EV^10K_4
Q42
EV^2N7002
ACIN 14,19
REV:E MODIFY
Nvidia MXM VGA CARD NEED
ATI MXM VGA CARD NO NEED
19,24 MBDATA
19,24 MBCLK
REV:B MODIFY
VTHM_DAT
VTHM_CLK
Q24
EV^2N7002
Q25
EV^2N7002
EV_CRT_R R147 EV^0_4 VGA_RED_SYS 13
EV_CRT_G R142 EV^0_4 VGA_GRN_SYS 13
EV_CRT_B R133 EV^0_4 VGA_BLU_SYS 13
EV_CRT_DDCCLK R123 EV^0_4 CRTDCLK 13
EV_CRT_DDCDAT R121 EV^0_4 CRTDDAT 13
5 INT_CRT_RED R146 IV^0_4 VGA_RED_SYS 13
5 INT_CRT_GRN R141 IV^0_4 VGA_GRN_SYS 13
5 INT_CRT_BLU R132 IV^0_4 VGA_BLU_SYS 13
REV:C MODIFY
R529 EV^0_4
R530 EV^0_4
5 INT_CRT_DDCCLK R124 IV^0_4 CRTDCLK 13
5 INT_CRT_DDCDAT R122 IV^0_4 CRTDDAT 13
REV:B MODIFY
EV_CRT_HSYNC R128 EV^0_4 CRTHSYNC 13
EV_CRT_VSYNC R125 EV^0_4 CRTVSYNC 13
5 INT_HSYNC R129 IV^0_4 CRTHSYNC 13
5 INT_VSYNC R126 IV^0_4 CRTVSYNC 13
EV_TV_Y/G R158 EV^0_4 TV_Y/G_SYS 13
EV_TV_C/R R162 EV^0_4 TV_C/R_SYS 13
EV_TV_COMP R152 EV^0_4 TV_COMP_SYS 13
5 INT_TV_Y/G R159 IV^0_4 TV_Y/G_SYS 13
5 INT_TV_C/R R163 IV^0_4 TV_C/R_SYS 13
5 INT_TV_COMP R153 IV^0_4 TV_COMP_SYS 13
EV_LVDS_BLON R77 EV^0_4 BLON 13
5 INT_LVDS_BLON R78 IV^0_4
EV_LVDS_VDDEN R79 EV^0_4
5 INT_LVDS_DIGON R80 IV^0_4 LCD_ON 13
EV_LVDS_DDCDAT RN5 EV^0_4P2R LCD_EDIDDAT 13
EV_LVDS_DDCCLK LCD_EDIDCLK 13
R531 EV^0_4
R532 EV^0_4
5 INT_LVDS_EDIDDATA RN4 IV^0_4P2R LCD_EDIDDAT 13
5 INT_LVDS_EDIDCLK LCD_EDIDCLK 13
REV:C MODIFY
13 LVDS_TXLCK- LVDS_TXLCK- RN12 IV^0_4P2R INT_TXLCLKOUT- 5
13 LVDS_TXLCK+ LVDS_TXLCK+ INT_TXLCLKOUT+ 5
13 LVDS_TXL0- LVDS_TXL0- RN6 IV^0_4P2R INT_TXLOUT0- 5
13 LVDS_TXL0+ LVDS_TXL0+ INT_TXLOUT0+ 5
13 LVDS_TXL1- LVDS_TXL1- RN8 IV^0_4P2R INT_TXLOUT1- 5
13 LVDS_TXL1+ LVDS_TXL1+ INT_TXLOUT1+ 5
13 LVDS_TXL2- LVDS_TXL2- RN10 IV^0_4P2R INT_TXLOUT2- 5
13 LVDS_TXL2+ LVDS_TXL2+ INT_TXLOUT2+ 5
13 LVDS_TXLCK- LVDS_TXLCK- RN13 EV^0_4P2R EV_LVDS_LCLK#
13 LVDS_TXLCK+ LVDS_TXLCK+ EV_LVDS_LCLK
13 LVDS_TXL0- LVDS_TXL0- RN7 EV^0_4P2R EV_LVDS_LTX#0
13 LVDS_TXL0+ LVDS_TXL0+ EV_LVDS_LTX0
13 LVDS_TXL1- LVDS_TXL1- RN9 EV^0_4P2R EV_LVDS_LTX#1
13 LVDS_TXL1+ LVDS_TXL1+ EV_LVDS_LTX1
13 LVDS_TXL2- LVDS_TXL2- RN11 EV^0_4P2R EV_LVDS_LTX#2
13 LVDS_TXL2+ LVDS_TXL2+ EV_LVDS_LTX2
VIN,4A
EV^10u/25V_1206 C519
EV^.1u/25V_6 C516
EV^1000p_4 C515
+5V,0.5A
EV^1u/10V_4 C233
EV^.1u/16V_4 C224
EV^1000p_4 C225
+3V,1.5A
EV^10u/6.3V_6 C128
EV^.1u/16V_4 C113
EV^1000p_4 C120
+2.5V,0.5A
EV^1u/10V_4 C115
EV^.1u/16V_4 C127
EV^1000p_4 C129
+1.8V,3.5A
EV^100u/6.3V_3528 C298
EV^10u/10V_8 C302
EV^10u/10V_8 C294
EV^.1u/16V_4 C283
REV:D MODIFY
CN20A
PWR_SRC
5VRUN
3V3RUN
2V5RUN
1V8RUN
GND
CLK_REQ#
PEX_RST#
PLTRST#
PLTRST# 11,14,15,16,19
PEX_REFCLK#
PEX_REFCLK
CLK_PCIE_MXM#
CLK_PCIE_MXM
CLK_PCIE_MXM# 2
CLK_PCIE_MXM 2
PEX_RX0#
PEX_RX1#
PEX_RX2#
PEX_RX3#
PEX_RX4#
PEX_RX5#
PEX_RX6#
PEX_RX7#
PEX_RX8#
PEX_RX9#
PEX_RX10#
PEX_RX11#
PEX_RX12#
PEX_RX13#
PEX_RX14#
PEX_RX15#
PEG_RXN0
PEG_RXN1
PEG_RXN2
PEG_RXN3
PEG_RXN4
PEG_RXN5
PEG_RXN6
PEG_RXN7
PEG_RXN8
PEG_RXN9
PEG_RXN10
PEG_RXN11
PEG_RXN12
PEG_RXN13
PEG_RXN14
PEG_RXN15
PEG_RXN[15:0] 5
PEX_RX0
PEX_RX1
PEX_RX2
PEX_RX3
PEX_RX4
PEX_RX5
PEX_RX6
PEX_RX7
PEX_RX8
PEX_RX9
PEX_RX10
PEX_RX11
PEX_RX12
PEX_RX13
PEX_RX14
PEX_RX15
PEG_RXP0
PEG_RXP1
PEG_RXP2
PEG_RXP3
PEG_RXP4
PEG_RXP5
PEG_RXP6
PEG_RXP7
PEG_RXP8
PEG_RXP9
PEG_RXP10
PEG_RXP11
PEG_RXP12
PEG_RXP13
PEG_RXP14
PEG_RXP15
PEG_RXP[15:0] 5
PEX_TX0#
PEX_TX1#
PEX_TX2#
PEX_TX3#
PEX_TX4#
PEX_TX5#
PEX_TX6#
PEX_TX7#
PEX_TX8#
PEX_TX9#
PEX_TX10#
PEX_TX11#
PEX_TX12#
PEX_TX13#
PEX_TX14#
PEX_TX15#
PEG_TXN0
PEG_TXN1
PEG_TXN2
PEG_TXN3
PEG_TXN4
PEG_TXN5
PEG_TXN6
PEG_TXN7
PEG_TXN8
PEG_TXN9
PEG_TXN10
PEG_TXN11
PEG_TXN12
PEG_TXN13
PEG_TXN14
PEG_TXN15
PEG_TXN[15:0] 5
PEX_TX0
PEX_TX1
PEX_TX2
PEX_TX3
PEX_TX4
PEX_TX5
PEX_TX6
PEX_TX7
PEX_TX8
PEX_TX9
PEX_TX10
PEX_TX11
PEX_TX12
PEX_TX13
PEX_TX14
PEX_TX15
PEG_TXP0
PEG_TXP1
PEG_TXP2
PEG_TXP3
PEG_TXP4
PEG_TXP5
PEG_TXP6
PEG_TXP7
PEG_TXP8
PEG_TXP9
PEG_TXP10
PEG_TXP11
PEG_TXP12
PEG_TXP13
PEG_TXP14
PEG_TXP15
PEG_TXP[15:0] 5
PAD1
PAD2
PRSNT1#
PRSNT2#
EVPRSNT1# R
R166 EV^0_4
R167 *EV^0_4
EVPRSNT1# 11
PROJECT : Z01
Quanta Computer Inc.
Size
Document Number
MXM
Rev
3B
Date: Thursday, May 17, 2007
Sheet 11 of 26

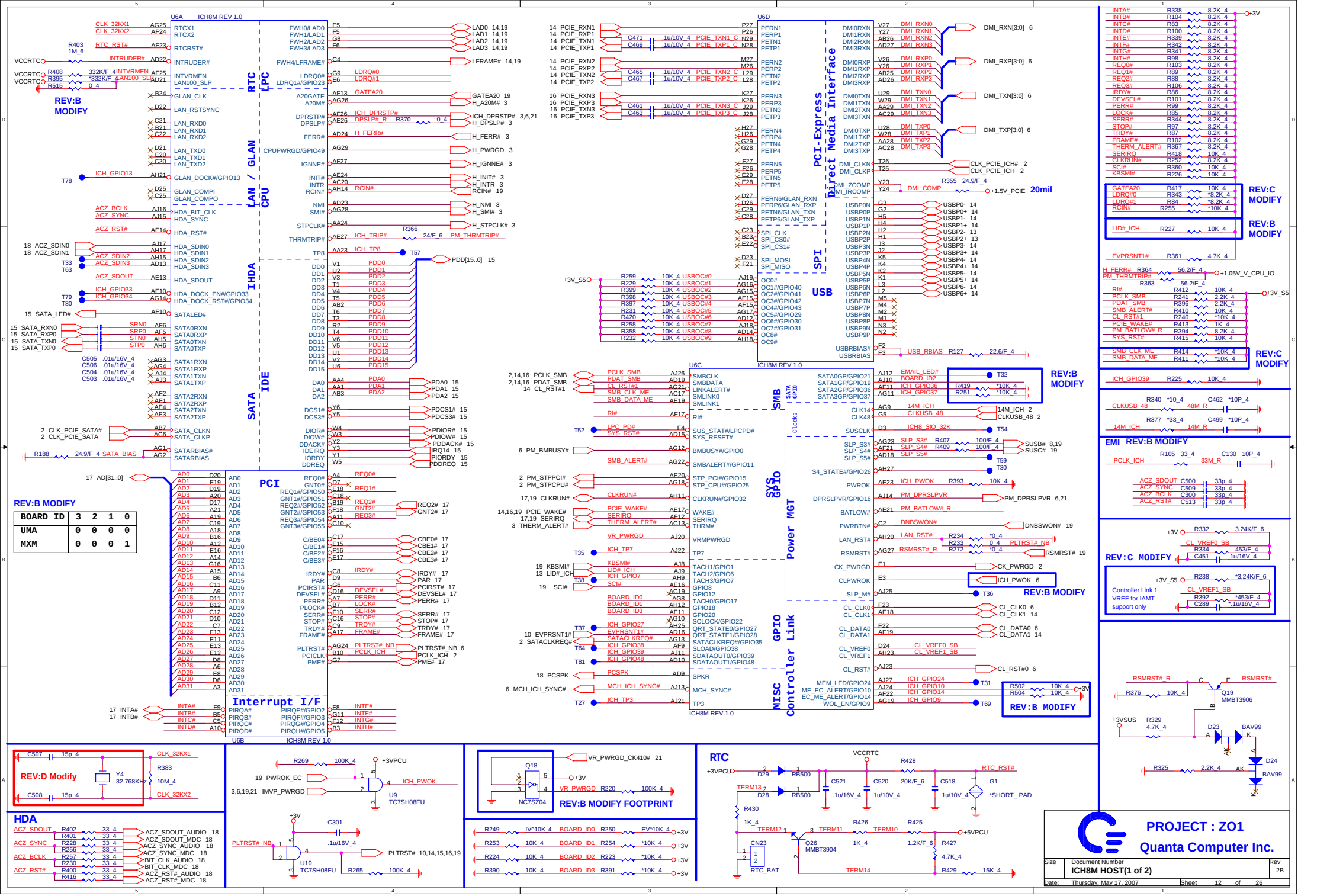
U6A ICH8M REV 1.0
RTC
LPC
GLAN
LAN / CPU
IHDA
SATA
IDE
PCI
Interrupt I/F
U6D
PCI-Express
Direct Media Interface
SPI
USB
U6C
SMB
Sata GPIO
Clocks
SYS GPIO
Power MGT
GPIO
Controller Link
MISC
ICH8M REV 1.0
REV:B MODIFY
REV:C MODIFY
REV:D Modify
REV:B MODIFY FOOTPRINT
HDA
RTC
PROJECT : ZO1
Quanta Computer Inc.
ICH8M HOST(1 of 2)
Size
Document Number
Rev
2B
Date: Thursday, May 17, 2007
Sheet 12 of 26

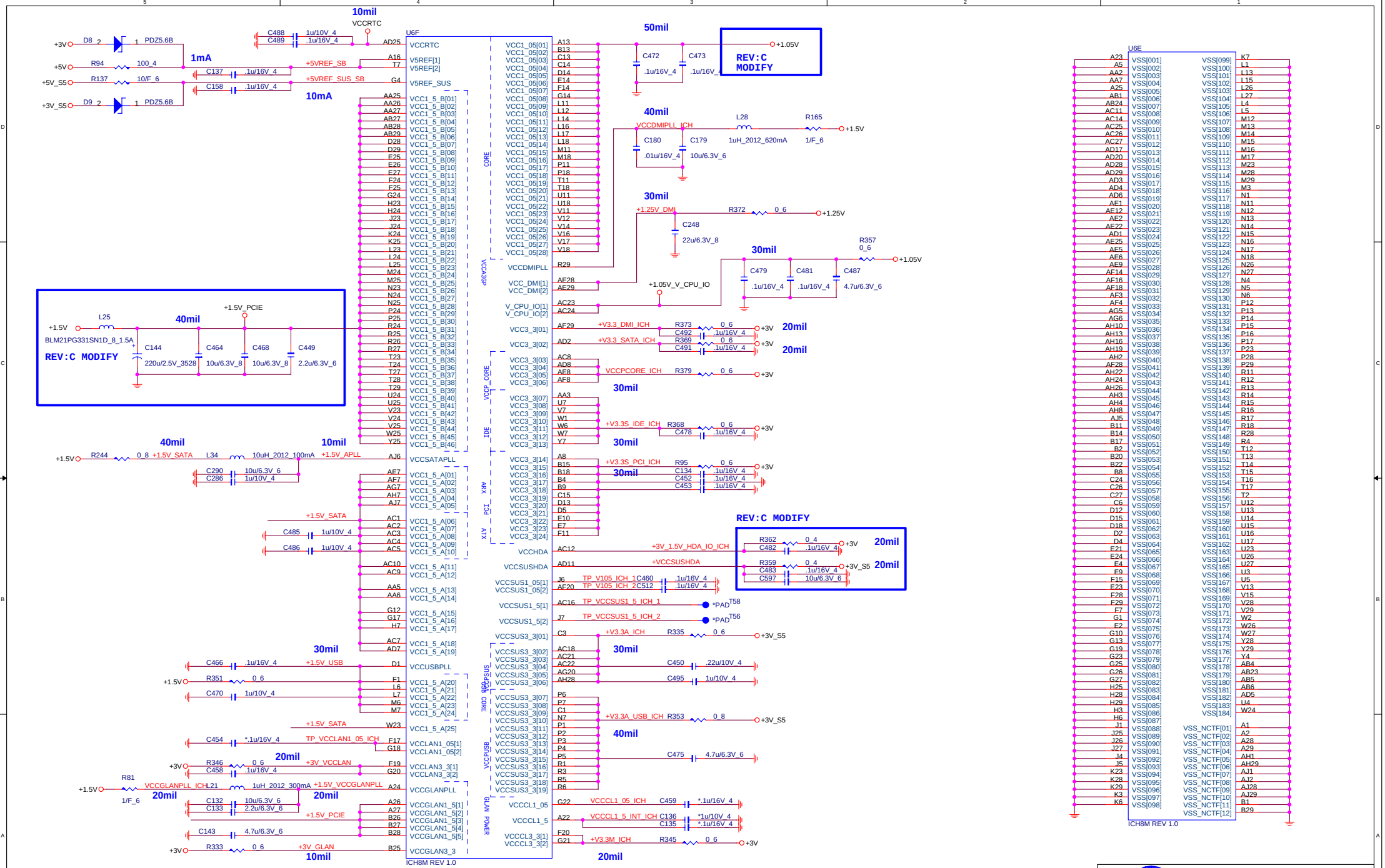
U6F
ICH8M REV 1.0
U6E
ICH8M REV 1.0
REV:C MODIFY
REV:C MODIFY
REV:C MODIFY
REV:C MODIFY
+3V
+5V
+5V_S5
+3V_S5
+1.5V
+1.05V
+1.25V
+1.5V_PCIE
+1.5V_SATA
+1.5V_APLL
+1.5V_USB
+1.5V_VCCGLANPLL
+3V_VCCLAN
+3V_GLAN
+5VREF_SB
+5VREF_SUS_SB
+1.25V_DMI
+1.05V_V_CPU_IO
+V3.3_DMI_ICH
+V3.3_SATA_ICH
VCCPCORE_ICH
+V3.3S_IDE_ICH
+V3.3S_PCI_ICH
+3V_1.5V_HDA_IO_ICH
+VCCSUSHDA
+V3.3A_ICH
+V3.3A_USB_ICH
VCCDMIPLL_ICH
VCCCL1_05_ICH
VCCCL1_5_INT_ICH
+V3.3M_ICH
TP_V105_ICH_1
TP_V105_ICH_2
TP_VCCSUS1_5_ICH_1
TP_VCCSUS1_5_ICH_2
TP_VCCLAN1_05_ICH
VCCRTC
10mil
1mA
10mA
50mil
40mil
30mil
20mil
10mil
BLM21PG331SN1D_8_1.5A
REV:C MODIFY
ICH8M Power(2 of 2)
PROJECT : ZO1
Quanta Computer Inc.
Size
Document Number
Rev
2B
Date: Thursday, May 17, 2007
Sheet 13 of 26

CRT

UMA mode
1. C8,9,11,12,15,17
use 4.7pF CH-4716TB06
2. L2,L4,L5 use CX8BA470003

MXM mode
1. C8,9,11,12,15,17
use 10pF CH01006JB08
2. L2,L4,L5 use
CX8BA220007

REV:B MODIFY

REV:D MODIFY

CM2009-02 have internal 15 ohm

REV:C MODIFY

REV:C MODIFY

REV:D MODIFY

S-VIDEO

UMA mode
1. C22,C24,C25,C27,C31,C32
use 6pF CH00606TB04
2. L8,L9,L10 use CX8LL121002

MXM mode
1. C22,C24,C25,C27,C31,C32
use 47pF CH04706JB01
2. L8,L9,L10 use CV+4701JN00

REV:E MODIFY

REV:E MODIFY

LVDS

Backlight Control

REV:B MODIFY

LCD_ON

REV:C MODIFY

LCD EDID SMBus PU

DPST

REV:C MODIFY

REV:C MODIFY

REV:C MODIFY

Camera

PROJECT : Z01

Quanta Computer Inc.

Size	Document Number	Rev
	LVDS/CRT/TVOUT/CCD	3B

Date: Thursday, May 17, 2007 Sheet 14 of 26

NEW-CARD

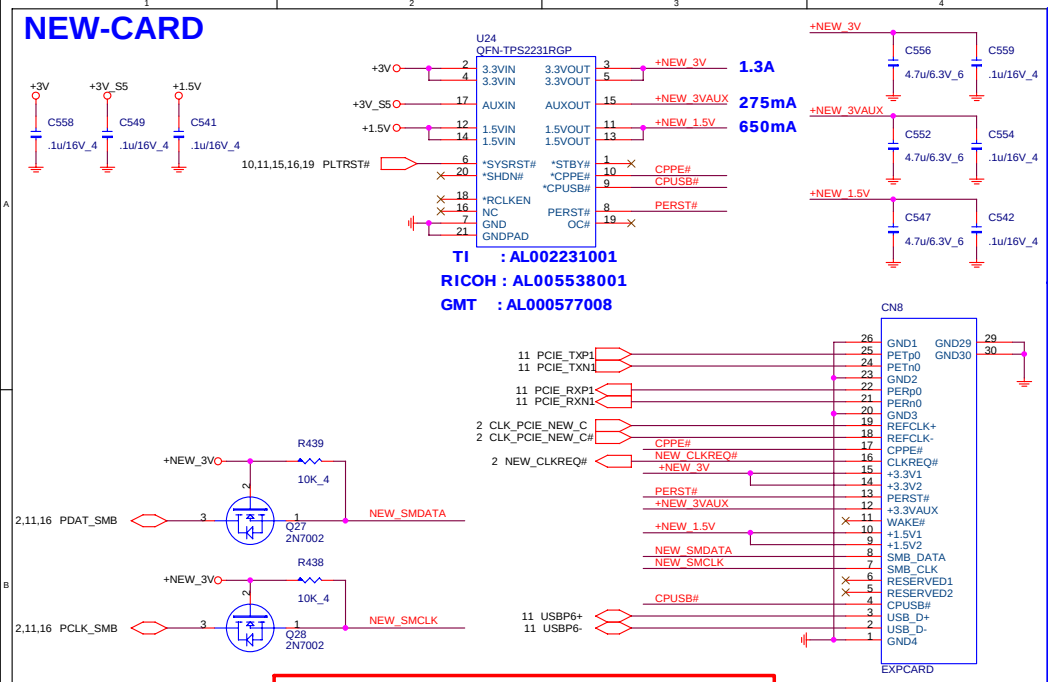

Bluetooth

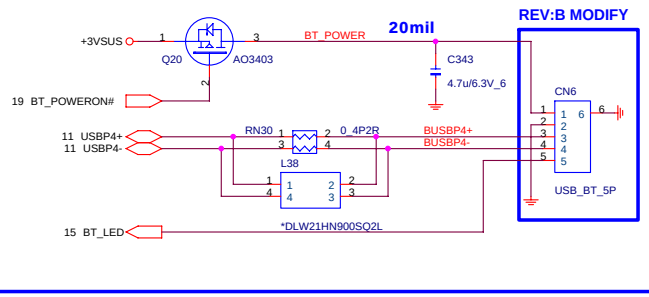

CIR

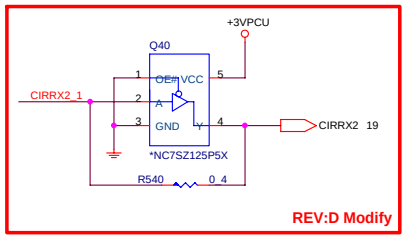

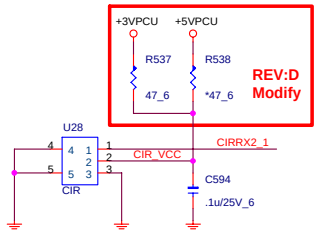

MINI-CARD

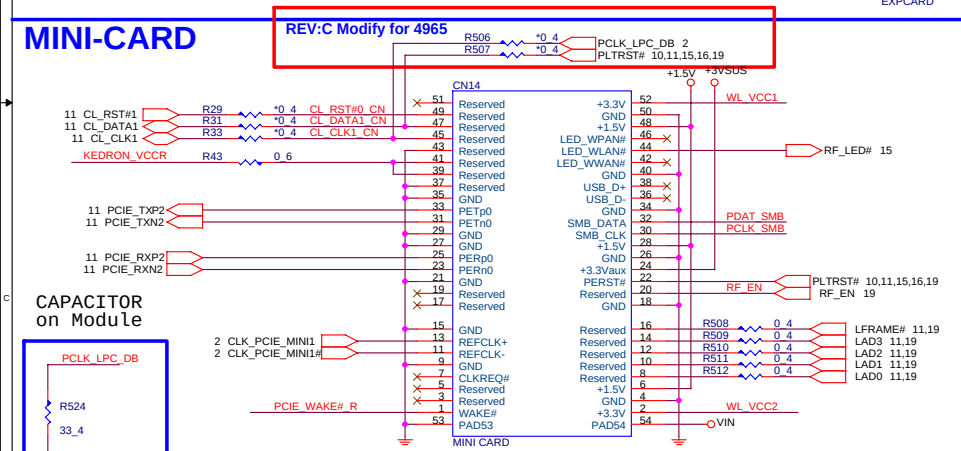

USB

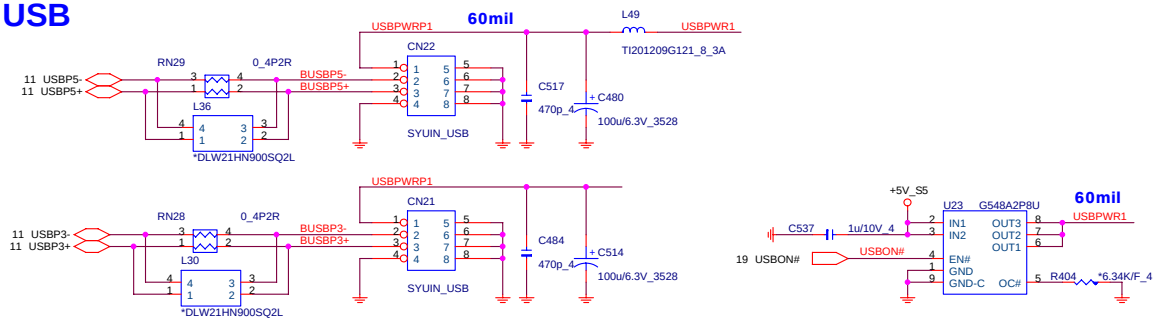

TO POWER/B

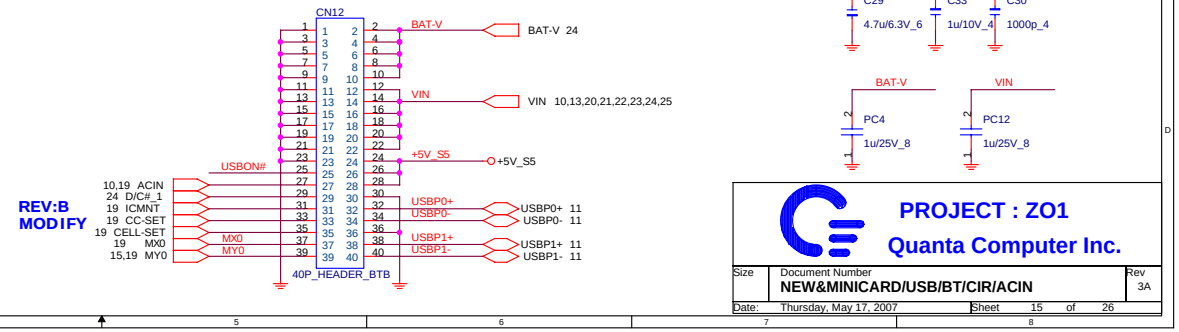

PROJECT : ZO1

Quanta Computer Inc.

Size	Document Number	Rev
	NEW&MINICARD/USB/BT/CIR/ACIN	3A

Date: Thursday, May 17, 2007 Sheet 15 of 26

ODD

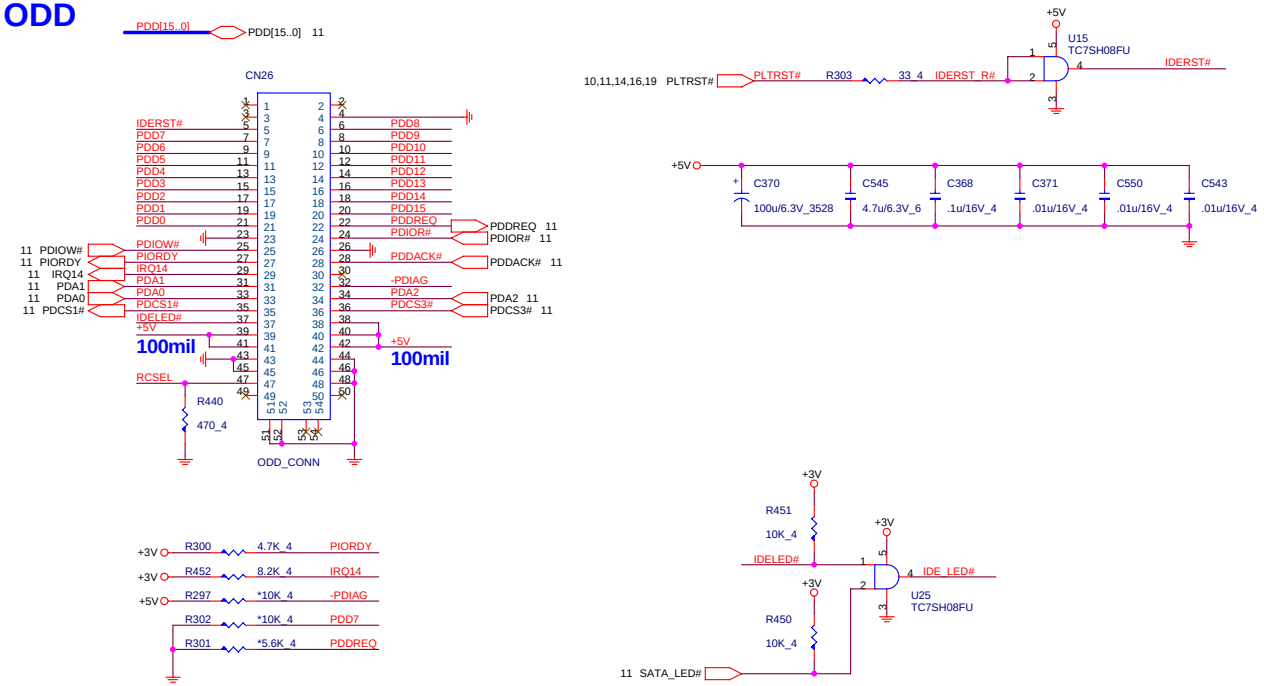

LED

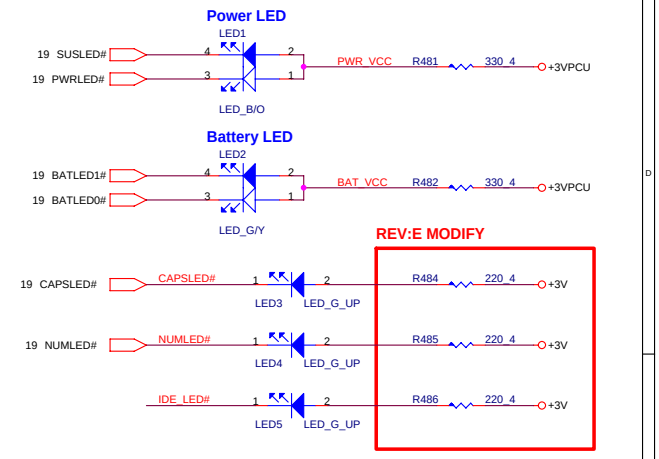

LID

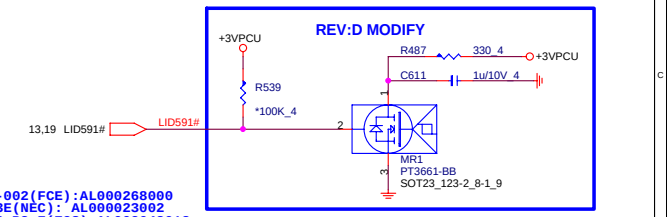

ME268-002(FCE):AL000268000
MRSS23E(NEC): AL000023002
EC2648-B3-F(ECS):AL002648018

SATA

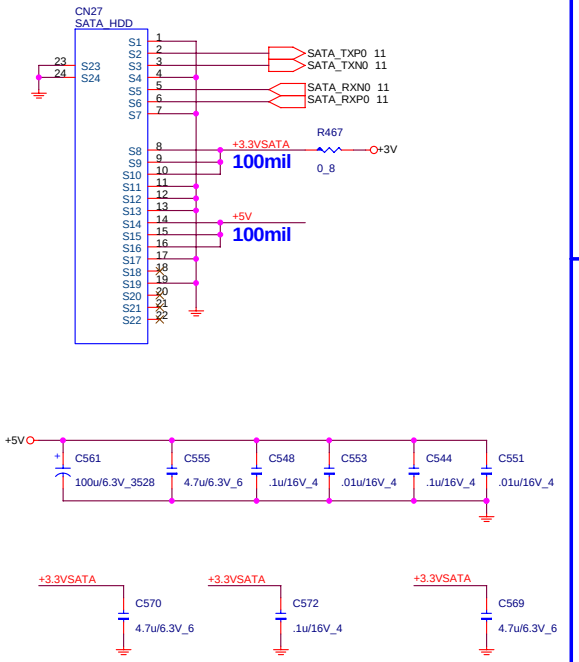

TP CONN

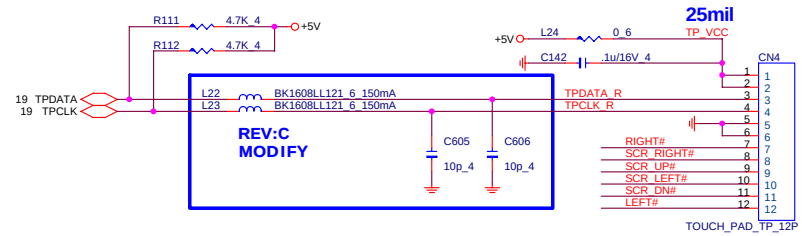

TO SW/B

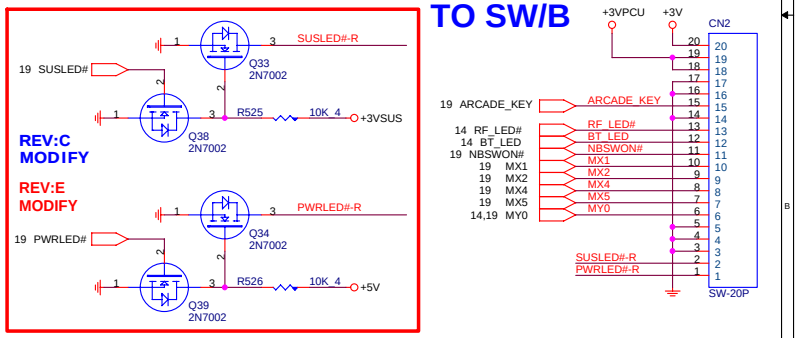

FAN

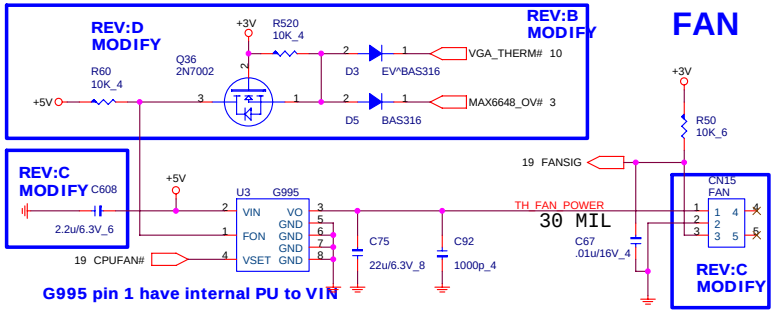

G995 pin 1 have internal PU to VIN

TP SWITCH

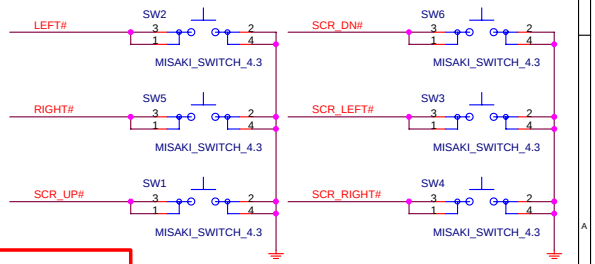

REV:E Modify

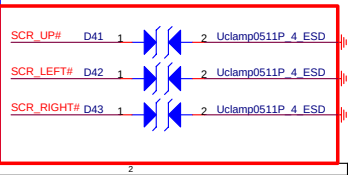

PROJECT : ZO1
Quanta Computer Inc.

Size	Document Number	Rev
	HDD/ODD/LED/SW/TP/FAN	3B
Date: Thursday, May 17, 2007	Sheet 16 of 26	

Giga LAN BCN5785M

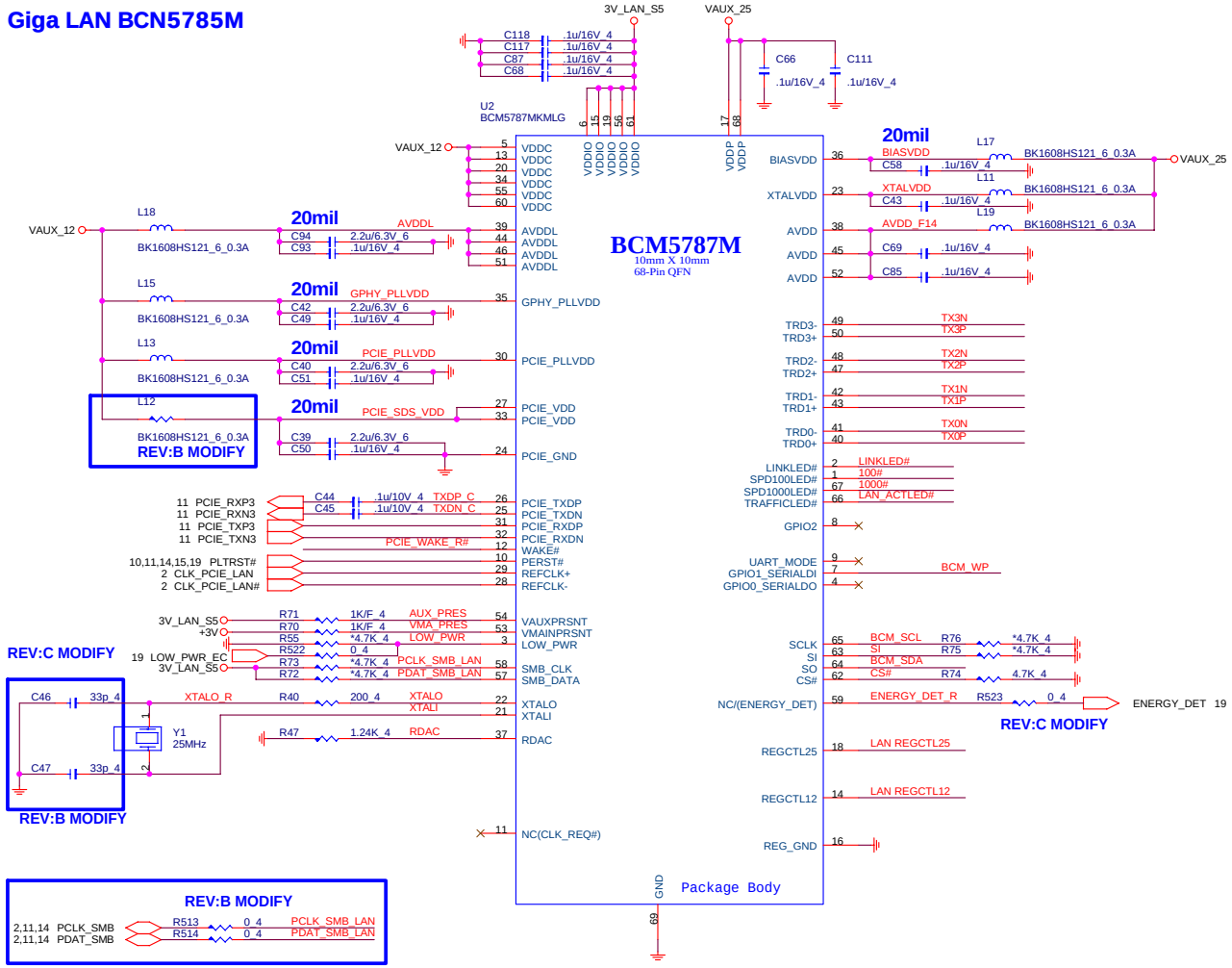

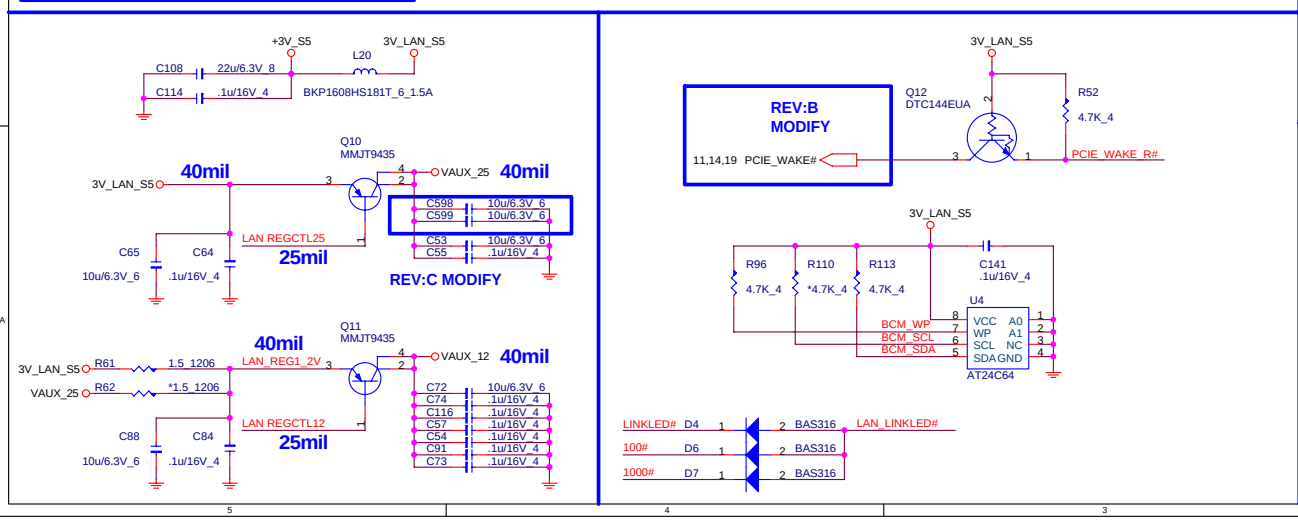

Transfomer

Source 1:	DELTA	LFE9249	DB0ZR1LAN11
Source 2:	Bothand	GST5009	DBKN1NLAN03
Source 3:	FCE	NS892402	DB0ZH1LAN06

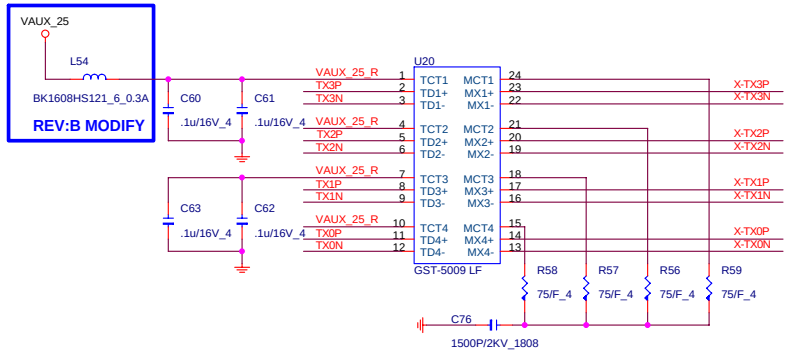

RJ45 & RJ11 connector

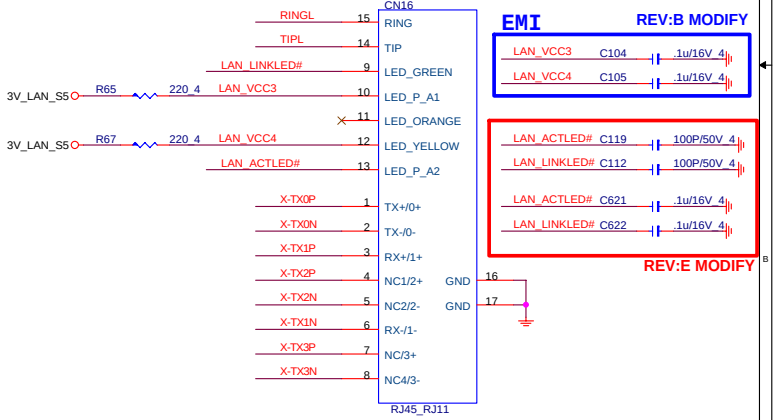

RJ11 cable

PROJECT : ZO1

Quanta Computer Inc.

Size	Document Number	Rev
	GigaLAN BCM5787M & RJ45/11	3A

Date: Thursday, May 17, 2007 Sheet 17 of 26

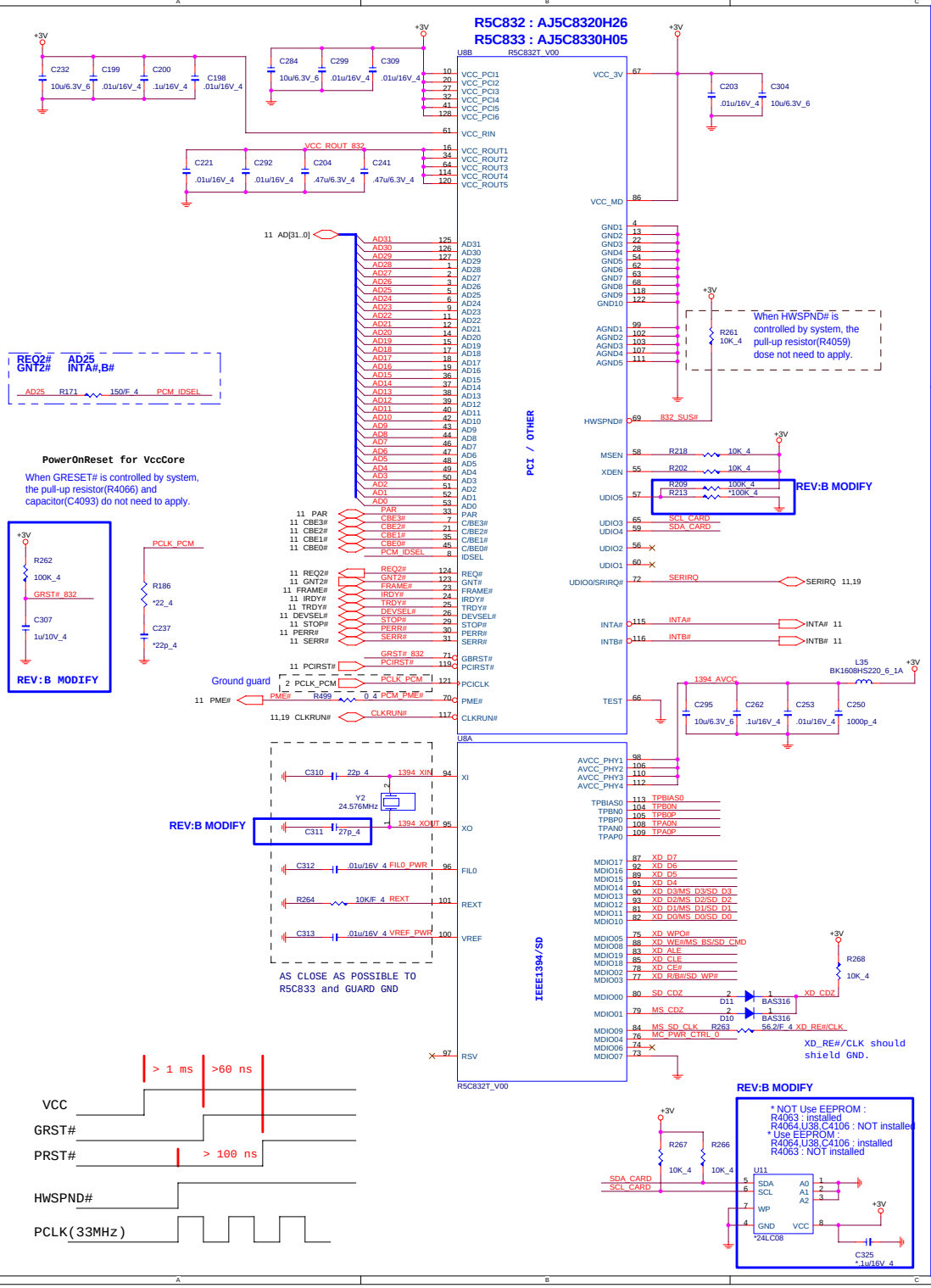

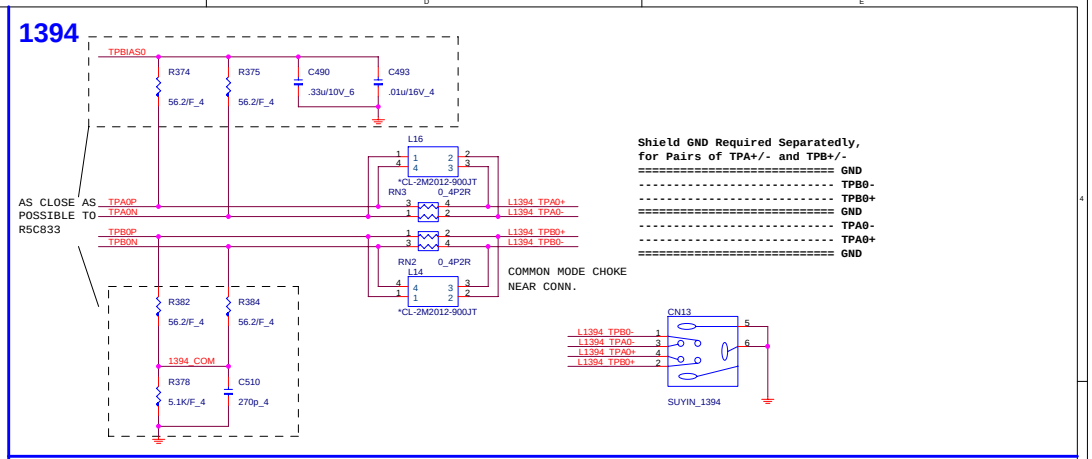

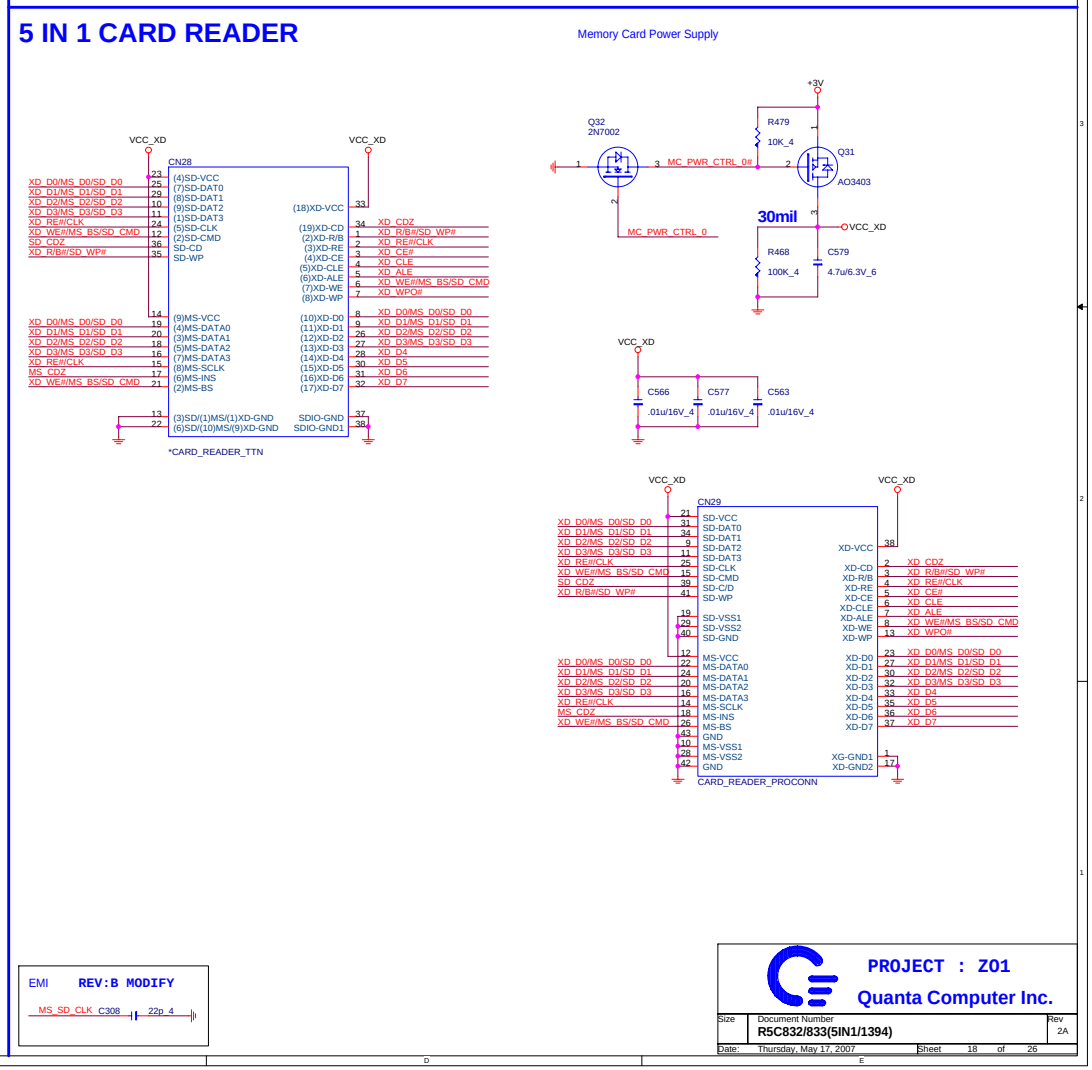

PROJECT : Z01

Quanta Computer Inc.

Size	Document Number	Rev
	R5C832/833(5IN1/1394)	2A

Date: Thursday, May 17, 2007 Sheet 18 of 26

CODEC(ALC268)

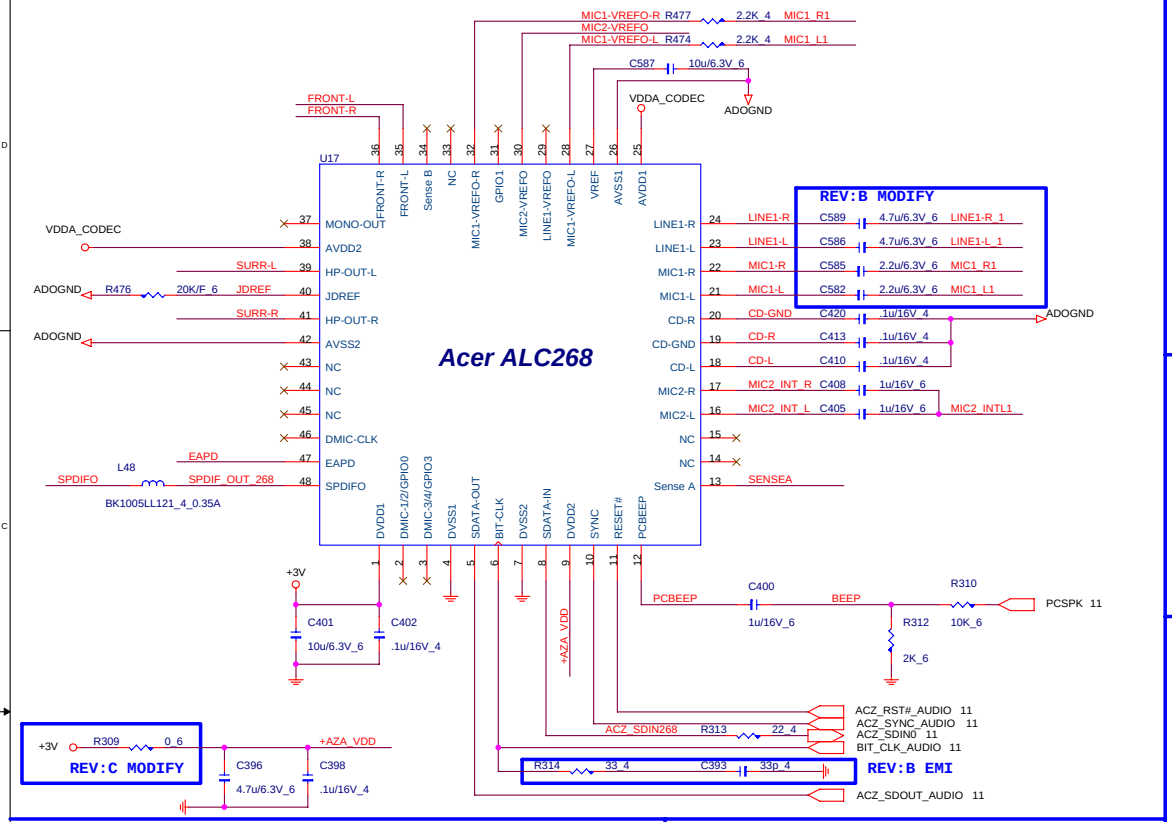

Speaker Amplifier

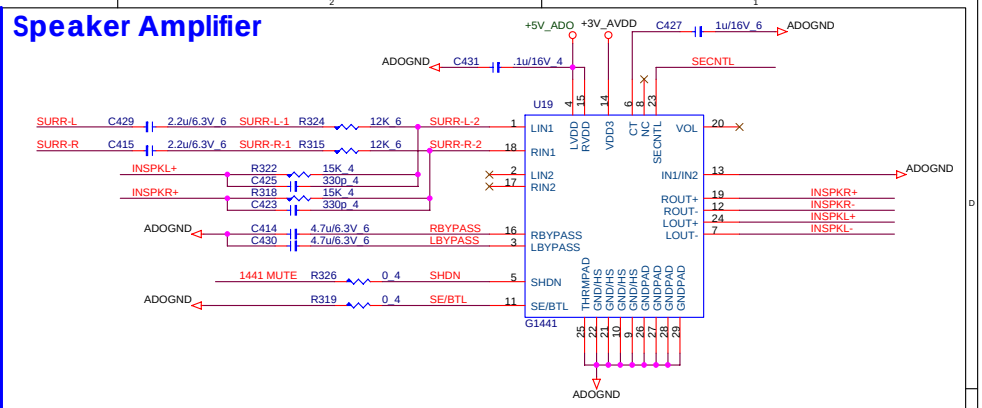

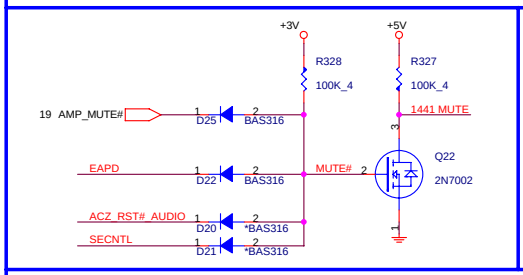

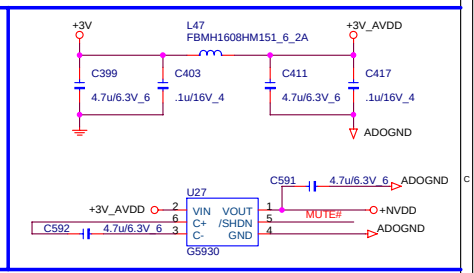

LINE OUT Amplifier

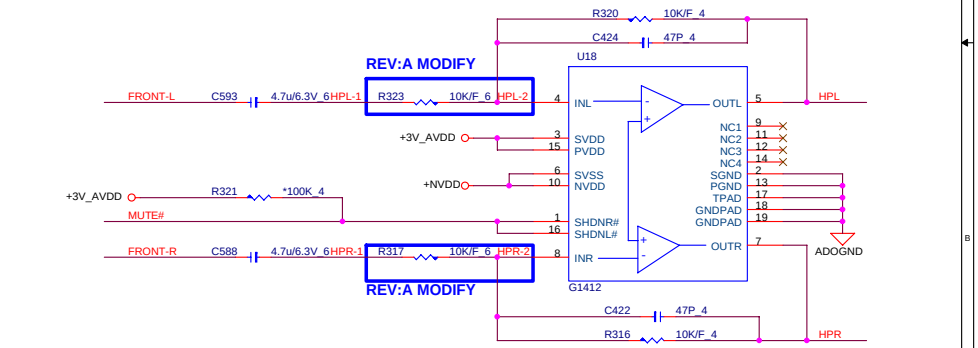

Codec Power

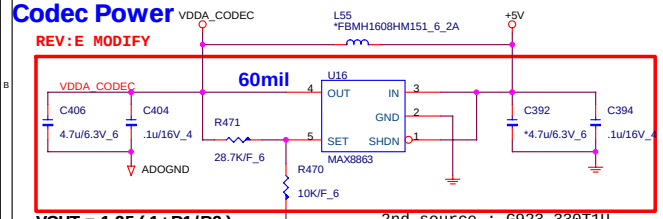

VOUT = 1.25 (1+R1/R2)

R1	R2
4.8375V	28.7K
	10K

2nd source : G923-330T1U
AL000923003

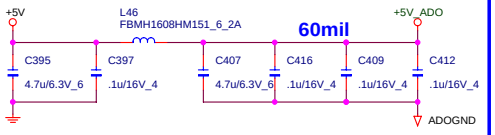

SPEAKER

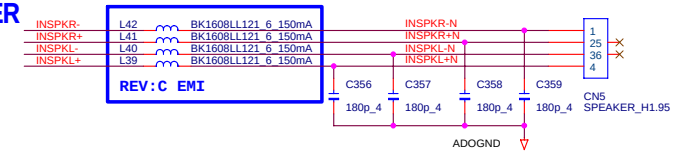

INT MIC array

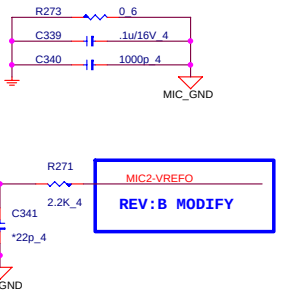

AUDIO/B

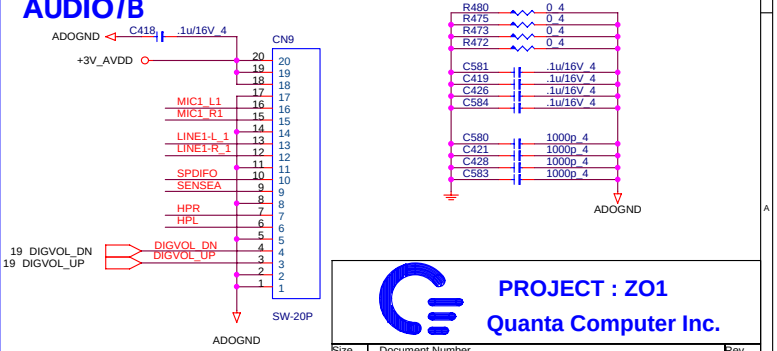

MDC

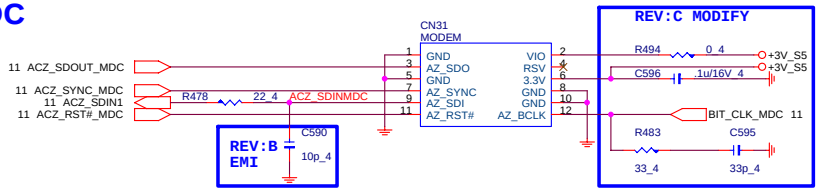

PROJECT : ZO1

Quanta Computer Inc.

Size	Document Number	Rev
	ALC268&MDC	3A

Date: Thursday, May 17, 2007 Sheet 19 of 26

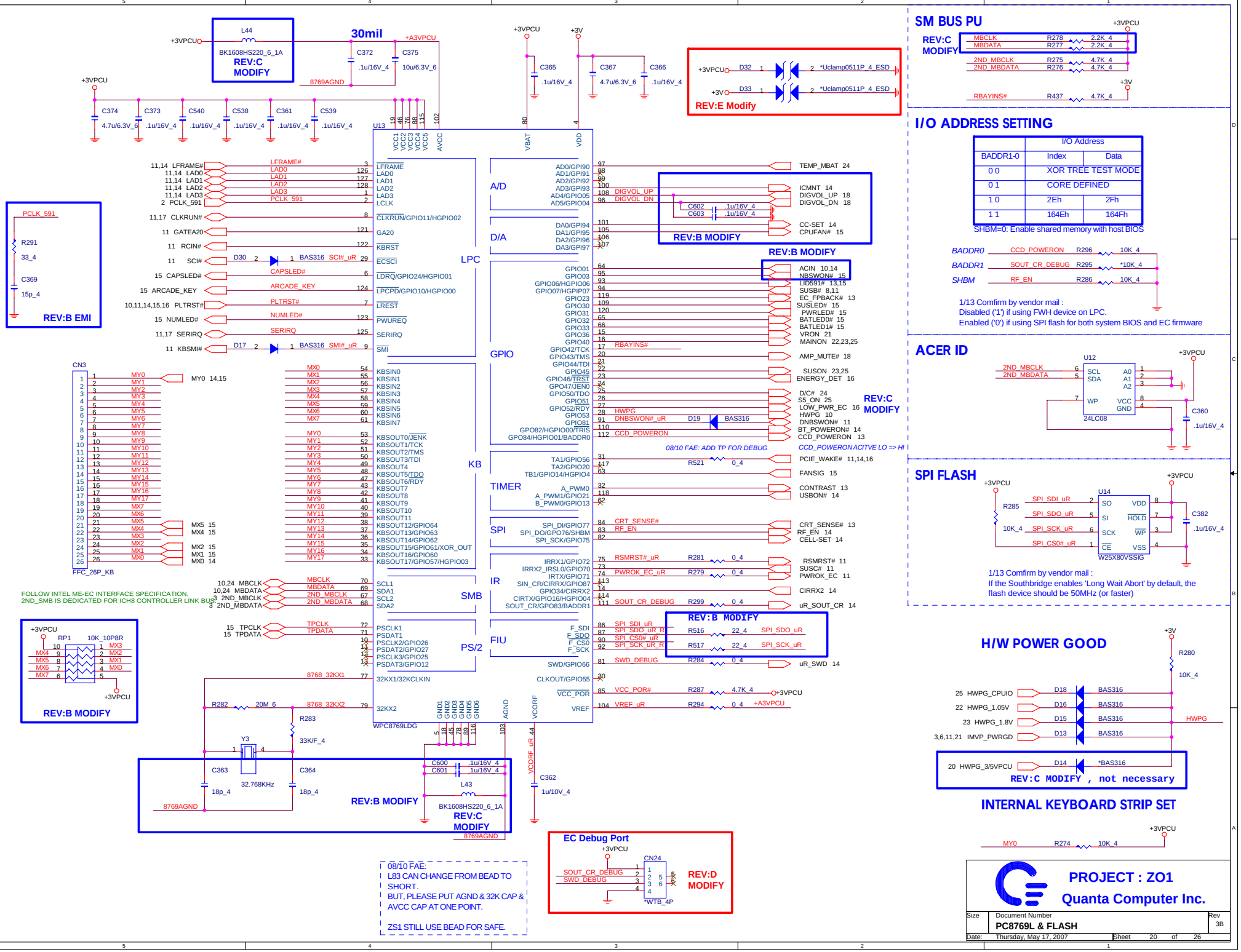
30mil
REV:C MODIFY
REV:E Modify
REV:B EMI
REV:B MODIFY
REV:C MODIFY
REV:C MODIFY , not necessary
REV:D MODIFY
SM BUS PU
I/O ADDRESS SETTING
ACER ID
SPI FLASH
H/W POWER GOOD
INTERNAL KEYBOARD STRIP SET
EC Debug Port
WPC8769LDG
PROJECT : ZO1
Quanta Computer Inc.
PC8769L & FLASH
Thursday, May 17, 2007

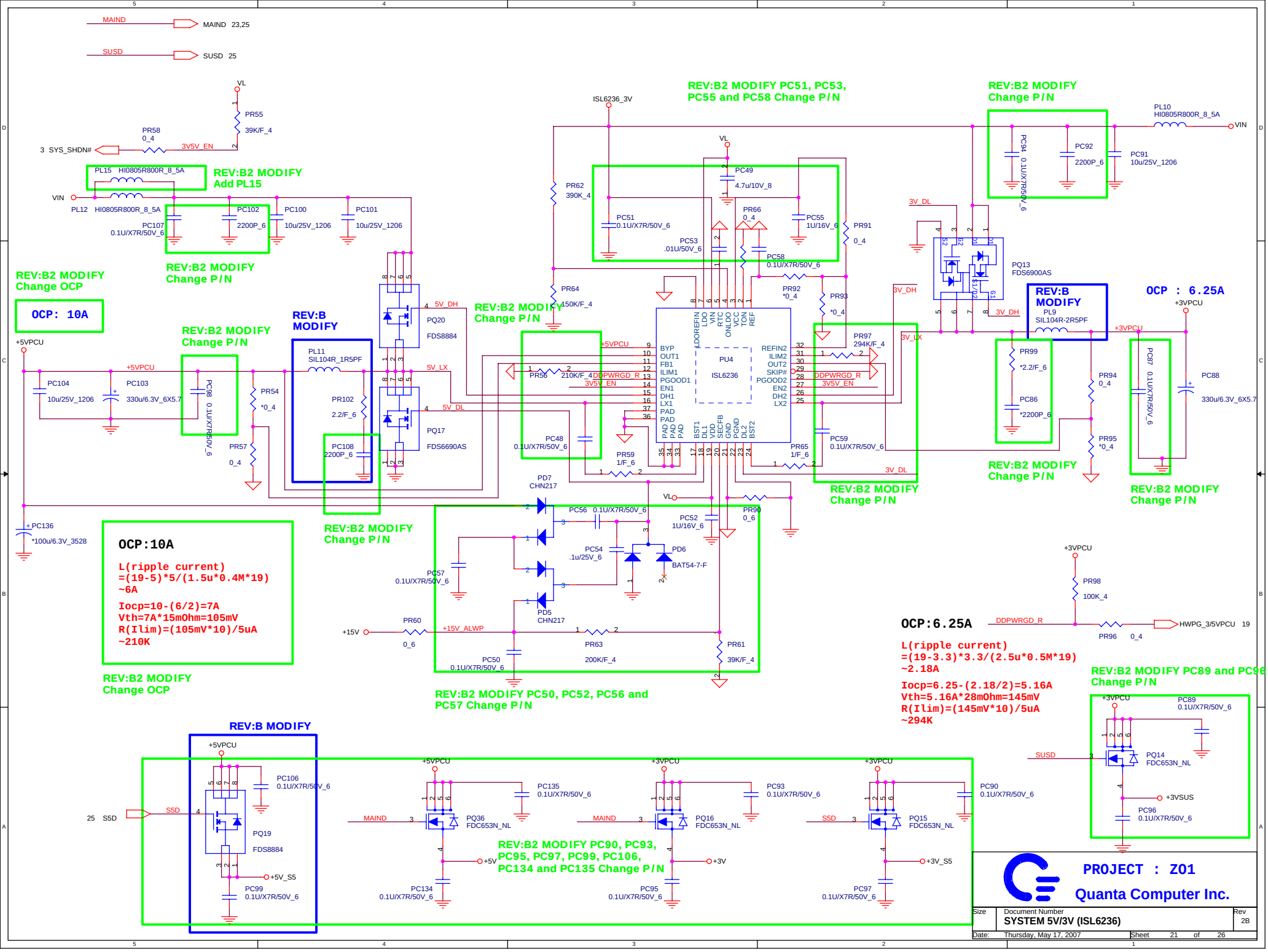
MAIND
MAIND 23,25
SUSD
SUSD 25
VL
PR55
39K/F_4
PR58
0_4
3 SYS_SHDN#
3V5V_EN
PL15 HI0805R800R_8_5A
REV:B2 MODIFY
Add PL15
VIN
PL12 HI0805R800R_8_5A
PC107
0.1U/X7R/50V_6
PC102
2200P_6
PC100
10u/25V_1206
PC101
10u/25V_1206
REV:B2 MODIFY
Change P/N
REV:B2 MODIFY
Change OCP
OCP: 10A
+5VPCU
PC104
10u/25V_1206
PC103
330u/6.3V_6X5.7
REV:B2 MODIFY
Change P/N
PC98
0.1U/X7R/50V_6
PR54
*0_4
PR57
0_4
REV:B
MODIFY
PL11
SIL104R_1R5PF
PR102
2.2/F_6
PC108
2200P_6
5V_DH
PQ20
FDS8884
5V_LX
5V_DL
PQ17
FDS6690AS
REV:B2 MODIFY
Change P/N
PC136
*100u/6.3V_3528
OCP:10A
L(ripple current)
=(19-5)*5/(1.5u*0.4M*19)
~6A
Iocp=10-(6/2)=7A
Vth=7A*15mOhm=105mV
R(Ilim)=(105mV*10)/5uA
~210K
REV:B2 MODIFY
Change OCP
ISL6236_3V
REV:B2 MODIFY PC51, PC53,
PC55 and PC58 Change P/N
PR62
390K_4
PC51
0.1U/X7R/50V_6
PC53
.01U/50V_6
PC49
4.7u/10V_8
PR66
0_4
PC55
1U/16V_6
PR91
0_4
PC58
0.1U/X7R/50V_6
PR64
150K/F_4
PR92
*0_4
PR93
*0_4
PR56
210K/F_4
DDPWRGD_R
3V5V_EN
PU4
ISL6236
BYP
OUT1
FB1
ILIM1
PGOOD1
EN1
DH1
LX1
PAD
LDOREFIN
LDO
VIN
RTC
ONLDO
VCC
TON
REF
REFIN2
ILIM2
OUT2
SKIP#
PGOOD2
EN2
DH2
LX2
BST1
DL1
VDD
SECFB
GND
PGND
DL2
BST2
PC48
0.1U/X7R/50V_6
PR59
1/F_6
PR65
1/F_6
PC59
0.1U/X7R/50V_6
PR97
294K/F_4
3V_LX
3V_DL
REV:B2 MODIFY
Change P/N
PD7
CHN217
PC56 0.1U/X7R/50V_6
PC52
1U/16V_6
PR90
0_6
PC54
.1u/25V_6
PD6
BAT54-7-F
PC57
0.1U/X7R/50V_6
PD5
CHN217
+15V
PR60
0_6
+15V_ALWP
PR63
200K/F_4
PR61
39K/F_4
PC50
0.1U/X7R/50V_6
REV:B2 MODIFY PC50, PC52, PC56 and
PC57 Change P/N
REV:B2 MODIFY
Change P/N
PC94
0.1U/X7R/50V_6
PC92
2200P_6
PC91
10u/25V_1206
PL10
HI0805R800R_8_5A
VIN
3V_DL
3V_DH
PQ13
FDS6900AS
REV:B
MODIFY
PL9
SIL104R-2R5PF
OCP : 6.25A
+3VPCU
PR99
*2.2/F_6
PC86
*2200P_6
PR94
0_4
PR95
*0_4
PC87
0.1U/X7R/50V_6
PC88
330u/6.3V_6X5.7
REV:B2 MODIFY
Change P/N
REV:B2 MODIFY
Change P/N
+3VPCU
PR98
100K_4
DDPWRGD_R
PR96 0_4
HWPG_3/5VPCU 19
OCP:6.25A
L(ripple current)
=(19-3.3)*3.3/(2.5u*0.5M*19)
~2.18A
Iocp=6.25-(2.18/2)=5.16A
Vth=5.16A*28mOhm=145mV
R(Ilim)=(145mV*10)/5uA
~294K
REV:B2 MODIFY PC89 and PC96
Change P/N
+3VPCU
PC89
0.1U/X7R/50V_6
SUSD
PQ14
FDC653N_NL
+3VSUS
PC96
0.1U/X7R/50V_6
REV:B MODIFY
+5VPCU
PC106
0.1U/X7R/50V_6
25 S5D
S5D
PQ19
FDS8884
+5V_S5
PC99
0.1U/X7R/50V_6
+5VPCU
PC135
0.1U/X7R/50V_6
MAIND
PQ36
FDC653N_NL
+5V
PC134
0.1U/X7R/50V_6
+3VPCU
PC93
0.1U/X7R/50V_6
MAIND
PQ16
FDC653N_NL
+3V
PC95
0.1U/X7R/50V_6
+3VPCU
PC90
0.1U/X7R/50V_6
S5D
PQ15
FDC653N_NL
+3V_S5
PC97
0.1U/X7R/50V_6
REV:B2 MODIFY PC90, PC93,
PC95, PC97, PC99, PC106,
PC134 and PC135 Change P/N
PROJECT : Z01
Quanta Computer Inc.
Size
Document Number
SYSTEM 5V/3V (ISL6236)
Rev
2B
Date: Thursday, May 17, 2007
Sheet 21 of 26

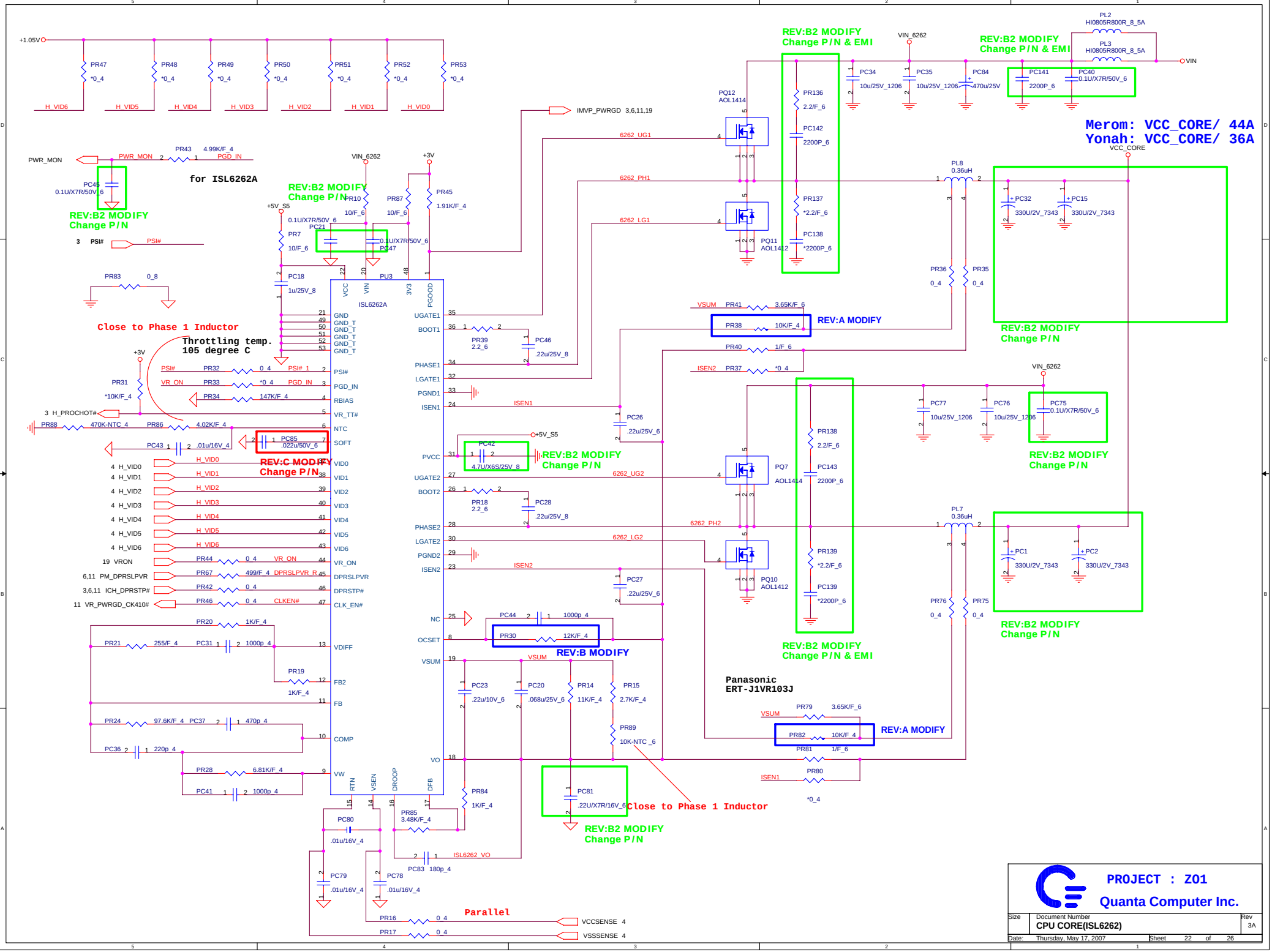
Merom: VCC_CORE/ 44A
Yonah: VCC_CORE/ 36A
for ISL6262A
REV:B2 MODIFY
Change P/N & EMI
REV:B2 MODIFY
Change P/N
REV:A MODIFY
REV:B MODIFY
REV:C MODIFY
Close to Phase 1 Inductor
Throttling temp.
105 degree C
Panasonic
ERT-J1VR103J
Parallel
ISL6262A
PROJECT : Z01
Quanta Computer Inc.
Size
Document Number
CPU CORE(ISL6262)
Rev
3A
Date: Thursday, May 17, 2007
Sheet 22 of 26

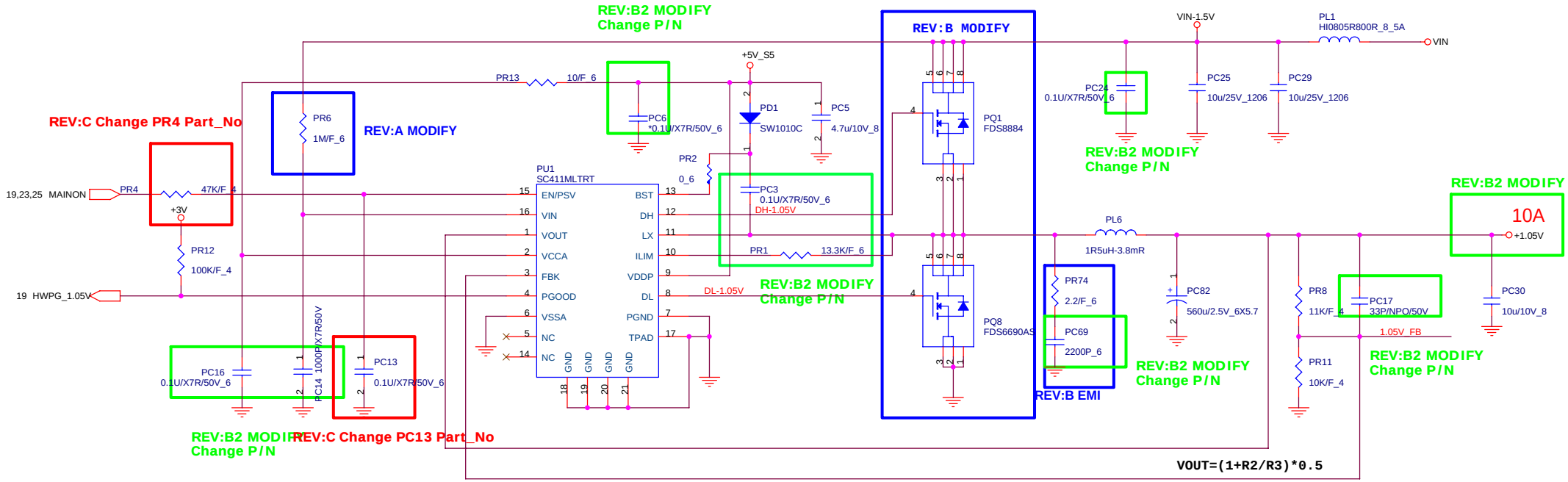

PROJECT : Z01

Quanta Computer Inc.

Size	Document Number	Rev
	VTT 1.05V(SC411)	3A

Date: Thursday, May 17, 2007 Sheet 23 of 26

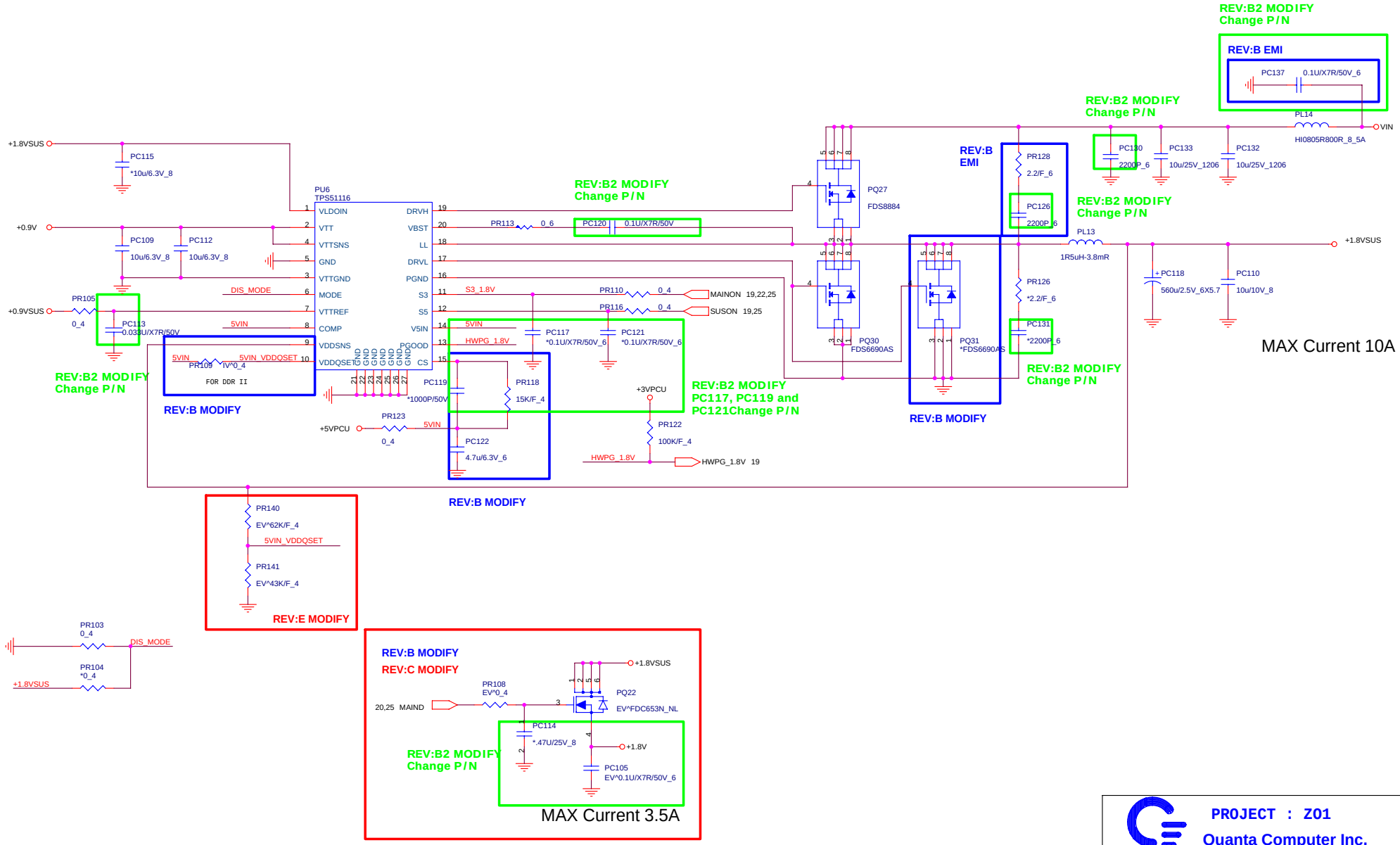

PROJECT : Z01

Quanta Computer Inc.

Size	Document Number	Rev
	DDR 1.8V(TPS51116)	3B

Date: Thursday, May 17, 2007 Sheet 24 of 26

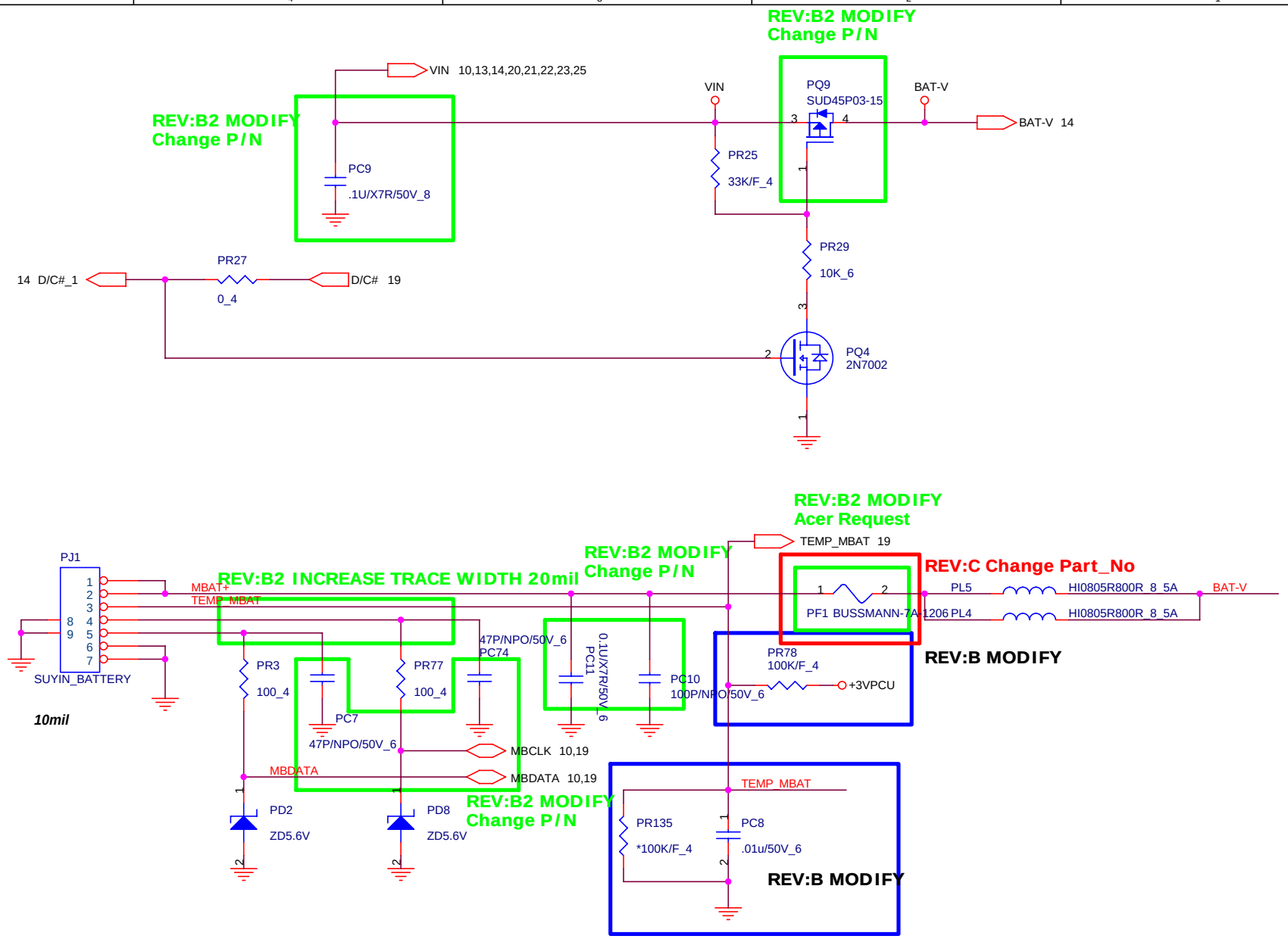

PROJECT : Z01

Quanta Computer Inc.

Size	Document Number	Rev
	CHARGER (ISL6251A)	3A

Date: Thursday, May 17, 2007 Sheet 25 of 26

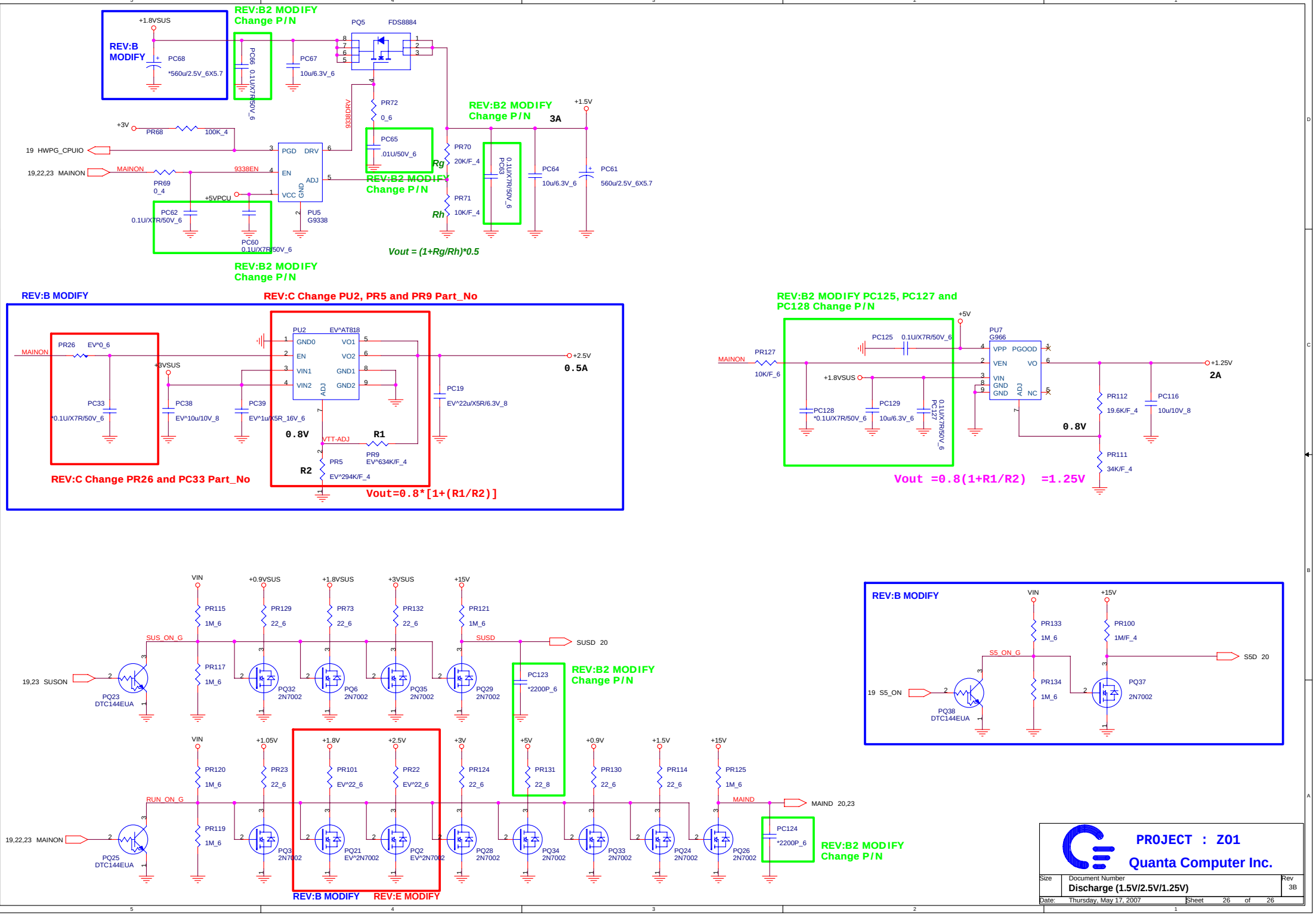
REV:B2 MODIFY
Change P/N
REV:B
MODIFY
+1.8VSUS
PC68
*560u/2.5V_6X5.7
PC66 0.1U/X7R/50V_6
PC67
10u/6.3V_6
PQ5
FDS8884
9338DRV
PR72
0_6
PC65
.01U/50V_6
Rg
REV:B2 MODIFY
Change P/N
REV:B2 MODIFY
Change P/N
3A
+1.5V
+3V
PR68
100K_4
19 HWPG_CPUIO
19,22,23 MAINON
MAINON
9338EN
PR69
0_4
+5VPCU
PGD
DRV
EN
ADJ
VCC
GND
PU5
G9338
PR70
20K/F_4
PR71
10K/F_4
Rh
PC63 0.1U/X7R/50V_6
PC64
10u/6.3V_6
PC61
560u/2.5V_6X5.7
PC62
0.1U/X7R/50V_6
PC60
0.1U/X7R/50V_6
REV:B2 MODIFY
Change P/N
Vout = (1+Rg/Rh)*0.5
REV:B MODIFY
REV:C Change PU2, PR5 and PR9 Part_No
MAINON
PR26
EV^0_6
PC33
*0.1U/X7R/50V_6
+3VSUS
PC38
EV^10u/10V_8
PC39
EV^1u/X5R_16V_6
PU2
EV^AT818
GND0
EN
VIN1
VIN2
ADJ
VO1
VO2
GND1
GND2
+2.5V
0.5A
PC19
EV^22u/X5R/6.3V_8
0.8V
VTT-ADJ
R1
PR9
EV^634K/F_4
R2
PR5
EV^294K/F_4
REV:C Change PR26 and PC33 Part_No
Vout=0.8*[1+(R1/R2)]
REV:B2 MODIFY PC125, PC127 and
PC128 Change P/N
+5V
PC125
0.1U/X7R/50V_6
MAINON
PR127
10K/F_6
+1.8VSUS
PC128
*0.1U/X7R/50V_6
PC129
10u/6.3V_6
PC127 0.1U/X7R/50V_6
PU7
G966
VPP
PGOOD
VEN
VO
VIN
GND
GND
ADJ
NC
+1.25V
2A
PR112
19.6K/F_4
PC116
10u/10V_8
0.8V
PR111
34K/F_4
Vout =0.8(1+R1/R2) =1.25V
VIN
+0.9VSUS
+1.8VSUS
+3VSUS
+15V
PR115
1M_6
PR129
22_6
PR73
22_6
PR132
22_6
PR121
1M_6
SUS_ON_G
SUSD
SUSD 20
19,23 SUSON
PR117
1M_6
PQ23
DTC144EUA
PQ32
2N7002
PQ6
2N7002
PQ35
2N7002
PQ29
2N7002
PC123
*2200P_6
REV:B2 MODIFY
Change P/N
VIN
+1.05V
+1.8V
+2.5V
+3V
+5V
+0.9V
+1.5V
+15V
PR120
1M_6
PR23
22_6
PR101
EV^22_6
PR22
EV^22_6
PR124
22_6
PR131
22_8
PR130
22_6
PR114
22_6
PR125
1M_6
RUN_ON_G
MAIND
MAIND 20,23
19,22,23 MAINON
PR119
1M_6
PQ25
DTC144EUA
PQ3
2N7002
PQ21
EV^2N7002
PQ2
EV^2N7002
PQ28
2N7002
PQ34
2N7002
PQ33
2N7002
PQ24
2N7002
PQ26
2N7002
PC124
*2200P_6
REV:B2 MODIFY
Change P/N
REV:B MODIFY
REV:E MODIFY
REV:B MODIFY
VIN
+15V
PR133
1M_6
PR100
1M/F_4
S5_ON_G
S5D 20
19 S5_ON
PR134
1M_6
PQ38
DTC144EUA
PQ37
2N7002
PROJECT : Z01
Quanta Computer Inc.
Size
Document Number
Discharge (1.5V/2.5V/1.25V)
Rev
3B
Date: Thursday, May 17, 2007
Sheet 26 of 26