1. ALL RESISTANCE VALUES ARE IN OHMS, 0.1 WATT +/- 5%.
2. ALL CAPACITANCE VALUES ARE IN MICROFARADS.
3. ALL CRYSTALS & OSCILLATOR VALUES ARE IN HERTZ.

REV	ZONE	ECN	DESCRIPTION OF CHANGE	CK APPD / DATE	ENG APPD / DATE
01		395077	ENGINEERING RELEASED	08/12/05	?

M1/M9 FHB-MCO_HBAR

PROTO VERSION

REVISION HISTORY

DATE	DESIGNER	DESCRIPTION
8/10/05	BBAILEY	PROTO VERSION - COPIED FROM 051-6964 REVISION 00016
8/10/05	BBAILEY	PROTO VERSION - SWITCH TO 1.0 MM HOT BAR CONNECTOR
8/11/05	BBAILEY	PROTO VERSION - 820 AND 630 NUMBERS ADDED
8/11/05	BBAILEY	PROTO VERSION - REMOVED MAX_EXPOSED_LENGTH, SPACING, NECK WIDTH = 0.2
8/11/05	BBAILEY	PROTO VERSION - REWIRE CONNECTOR J7
8/11/05	BBAILEY	PROTO VERSION - CHANGING HOLE
8/12/05	BBAILEY	PROTO VERSION - CHANGING HOLE

PART NUMBER	QTY	DESCRIPTION	REFERENCE DES	CRITICAL	BOM OPTION
051-6978	1	SCH,M1/M9,FHB_MCO_HBAR	SCH	?	?
820-1920	1	PCB,M1/M9,FHB_MCO_HBAR	PCB	?	?
630-7311	1	PCBA,FHB_MCO_HBAR,M1_M9	BOM	?	OMIT

DIMENSIONS ARE IN MILLIMETERS
XX ±
X.XX ±
X.XXX ±
ANGLES ±
DO NOT SCALE DRAWING

THIRD ANGLE PROJECTION

METRIC

DRAFTER		DESIGN CK	
ENG APPD		MFG APPD	
QA APPD		DESIGNER	
RELEASE		SCALE NONE	

MATERIAL/FINISH NOTED AS APPLICABLE

SIZE D

Apple Computer Inc.

NOTICE OF PROPRIETARY PROPERTY

THE INFORMATION CONTAINED HEREIN IS THE PROPRIETARY PROPERTY OF APPLE COMPUTER, INC. THE POSSESSOR AGREES TO THE FOLLOWING

I TO MAINTAIN THE DOCUMENT IN CONFIDENCE
II NOT TO REPRODUCE OR COPY IT
III NOT TO REVEAL OR PUBLISH IN WHOLE OR PART

TITLE M1/M9 FHB-MCO_HBAR

DRAWING NUMBER 051-6978 REV. 01

SHT 1 OF 3

www.laptop-schematics.com

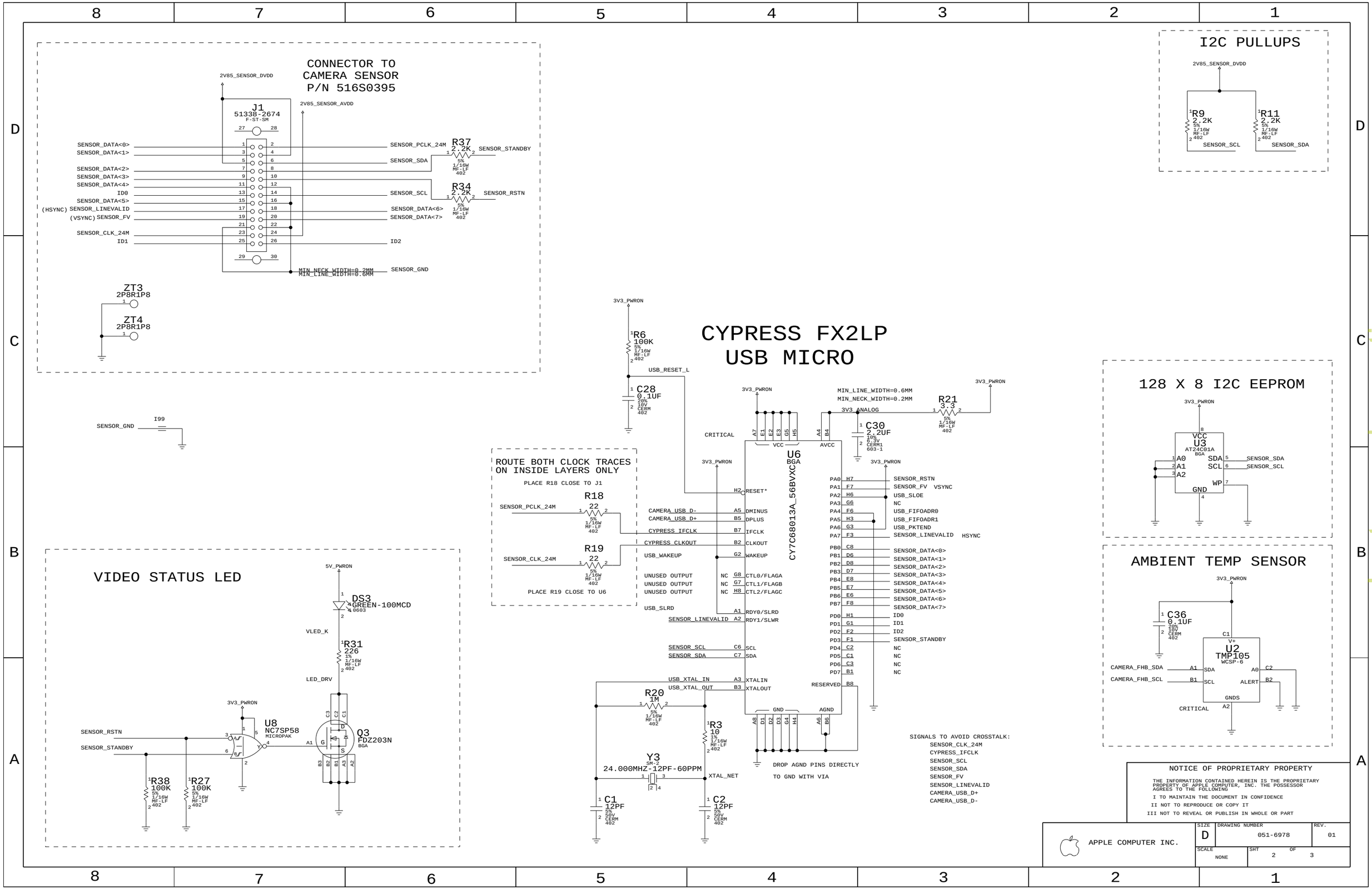

www.laptop-schematics.com

POWER REGULATORS DECOUPLING, AND INTERCONNECT

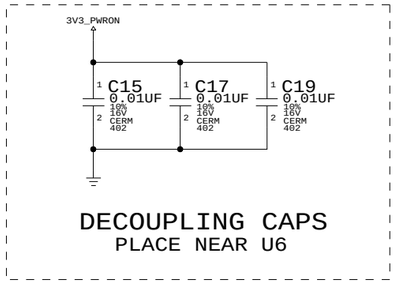

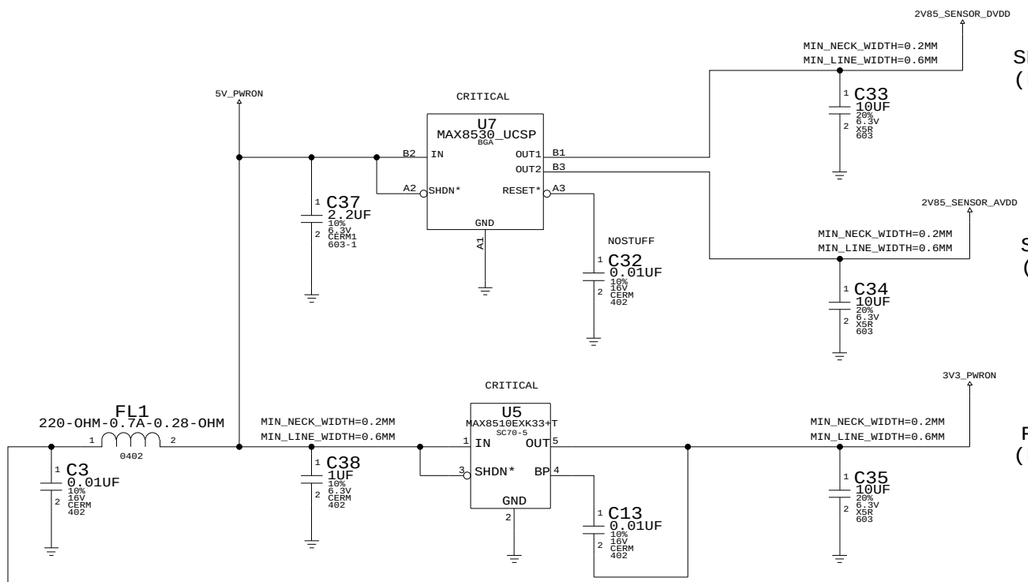

SENSOR DVDD 2.85V RAIL @ 200MA MAX
(FIXED OUTPUT)

SENSOR AVDD 2.85V RAIL @150MA MAX
(FIXED OUTPUT)

FX2LP 3.3V RAIL @ 120MA MAX
(FIXED OUTPUT)

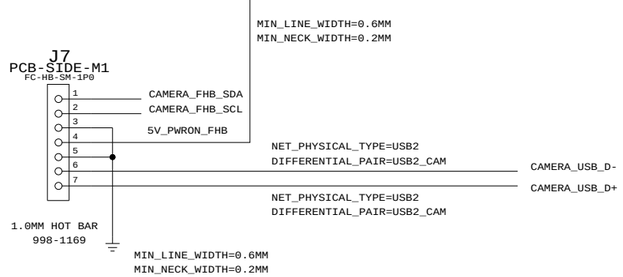

MLB TO FHB CONNECTION

NOTICE OF PROPRIETARY PROPERTY

THE INFORMATION CONTAINED HEREIN IS THE PROPRIETARY PROPERTY OF APPLE COMPUTER, INC. THE POSSESSOR AGREES TO THE FOLLOWING

I TO MAINTAIN THE DOCUMENT IN CONFIDENCE
II NOT TO REPRODUCE OR COPY IT
III NOT TO REVEAL OR PUBLISH IN WHOLE OR PART

APPLE COMPUTER INC.

SIZE	DRAWING NUMBER	REV.
D	051-6978	01
SCALE NONE	SHT 3 OF 3	

www.laptop-schematics.com