# Compal QAWGE/PAWGE

## Compal LA-8681P Schematics Document

AMD APU Zacate-FT1 + FCH Hudson-M3L + GPU RobsonXT

Lenovo B585

REV:1.0

| | | | |
|---|---|---|---|
| Security Classification | Compal Secret Data | | |
| Issued Date | 2010/06/30 | Deciphered Date | 2012/06/30 |

THIS SHEET OF ENGINEERING DRAWING IS THE PROPRIETARY PROPERTY OF COMPAL ELECTRONICS, INC. AND CONTAINS CONFIDENTIAL AND TRADE SECRET INFORMATION. THIS SHEET MAY NOT BE TRANSFERED FROM THE CUSTODY OF THE COMPETENT DIVISION OF R&D DEPARTMENT EXCEPT AS AUTHORIZED BY COMPAL ELECTRONICS, INC. NEITHER THIS SHEET NOR THE INFORMATION IT CONTAINS MAY BE USED BY OR DISCLOSED TO ANY THIRD PARTY WITH OUT PRIOR WRITTEN CONSENT OF COMPAL ELECTRONICS, INC.

| | | | |
|---|---|---|---|
| Compal Electronics, Inc. | | | |
| Title: Cover Page | | | |
| Size: B | Document Number: LA8681P | | Rev: 1.0 |
| Date: Tuesday, November 29, 2011 | Sheet 1 of 48 | | |

Compal confidential
File Name : PAWGE

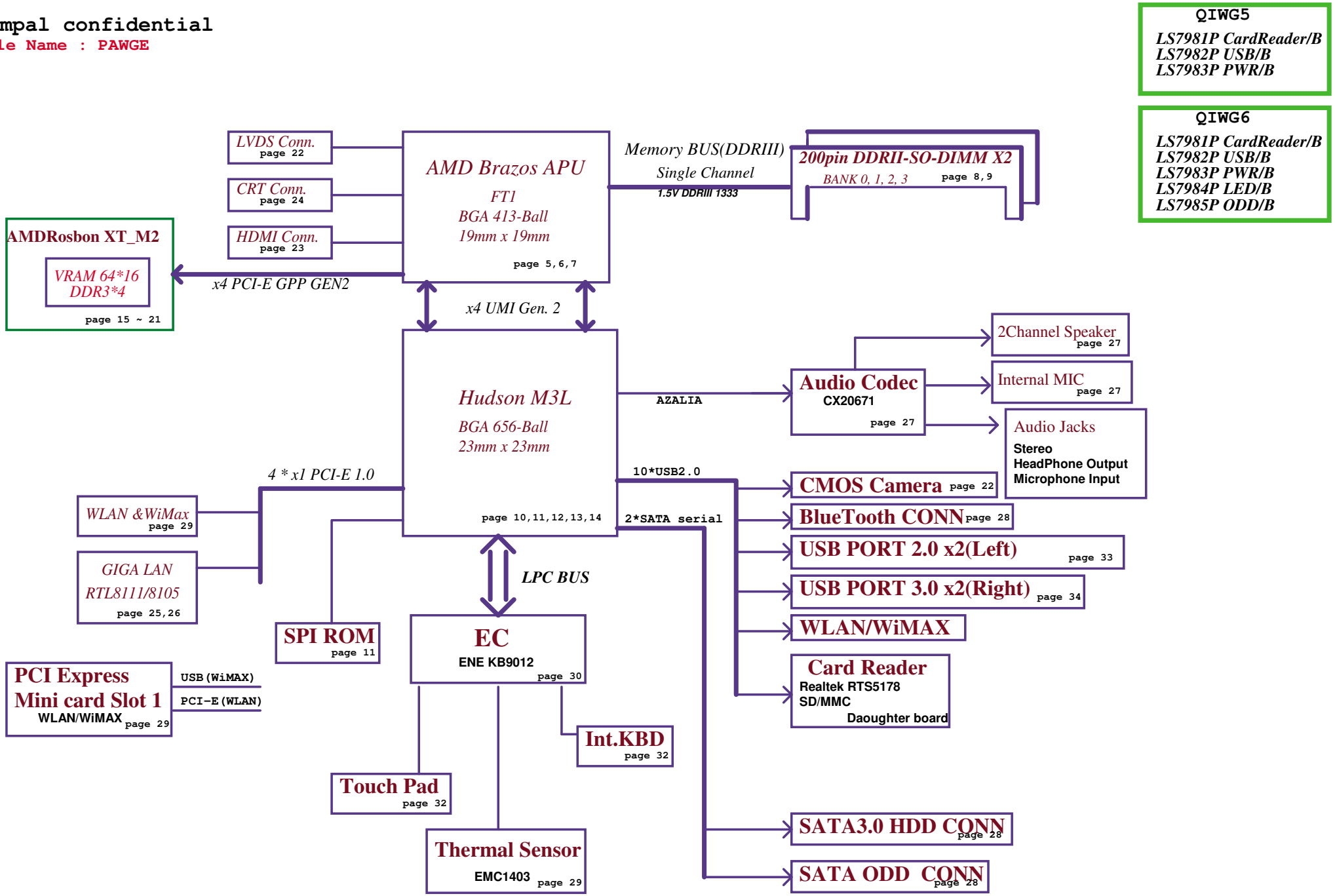


| | | | |
|---|---|---|---|
| Security Classification | Compal Secret Data | | |
| Issued Date | 2010/06/30 | Deciphered Date | 2012/06/30 |

THIS SHEET OF ENGINEERING DRAWING IS THE PROPRIETARY PROPERTY OF COMPAL ELECTRONICS, INC. AND CONTAINS CONFIDENTIAL AND TRADE SECRET INFORMATION. THIS SHEET MAY NOT BE TRANSFERED FROM THE CUSTODY OF THE COMPETENT DIVISION OF R&D DEPARTMENT EXCEPT AS AUTHORIZED BY COMPAL ELECTRONICS, INC. NEITHER THIS SHEET NOR THE INFORMATION IT CONTAINS MAY BE USED BY OR DISCLOSED TO ANY THIRD PARTY WITHOUT PRIOR WRITTEN CONSENT OF COMPAL ELECTRONICS, INC.

Compal Electronics, Inc.

Title: Block Diagrams

Size: B | Document Number: LA8681P | Rev: 1.0

Date: Tuesday, November 29, 2011 | Sheet 2 of 48

## Voltage Rails

| Power Plane | Description | S1 | S3 | S5 |
|---|---|---|---|---|
| VIN | Adapter power supply (19V) | N/A | N/A | N/A |
| B+ | AC or battery power rail for power circuit. | N/A | N/A | N/A |
| +APU_CORE | Core voltage for CPU (0.7-1.2V) | ON | OFF | OFF |
| +APU_CORE_NB | 1.0V switched power rail | ON | OFF | OFF |
| +1.5V | 1.5V power rail for CPU VDDIO and DDRIII | ON | ON | OFF |
| +0.75VS | 0.75VS switched power rail for DDR terminator | ON | OFF | OFF |
| +1.0VS | 1.0V switched power rail for NB VDDC & VGA | ON | OFF | OFF |
| +1.1VS | 1.1VS switched power rail | ON | OFF | OFF |
| +1.8VS | 1.8V switched power rail | ON | OFF | OFF |
| +3VALW | 3.3V always on power rail | ON | ON | ON* |
| +3V_LAN | 3.3V power rail for LAN | ON | ON(WOL) | OFF |
| +3VS | 3.3V switched power rail | ON | OFF | OFF |
| +5VALW | 5V always on power rail | ON | ON | ON* |
| +5VS | 5V switched power rail | ON | OFF | OFF |
| +VSB | VSB always on power rail | ON | ON | ON* |
| +RTCVCC | RTC power | ON | ON | ON |
| +1.1VALW | 1.1V always on power rail | ON | ON | ON* |

Note : ON* means that this power plane is ON only with AC power available, otherwise it is OFF.

## EC SM Bus1 address

| Device | Address | HEX |
|---|---|---|
| Smart Battery | 0001-011xb | 15H |

## EC SM Bus2 address

| Device | Address | HEX |
|---|---|---|
| EMC1412-2 (dGPU) | 1111-100xb | F8H |
| EMC1403-2(DDR,WLAN) | 1001-101xb | 9AH |
| SB-TSI | 1001-100xb | 98H |

## SM Bus Controller 0

(FCH_SMB1 ~ FCH_SMB4, SMB_ALERT#)

| Device | Address | HEX |
|---|---|---|
| APU SIC/SID (FCH_SMB3) | | |
| H_THERMTRIP# (FCH_ALERT#) | | |

## SM Bus Controller 1

(FCH_SMB0)

| Device | Address | HEX |
|---|---|---|
| DDR DIMM1 (FCH_SMB0) | 1001-000xb | 90 |
| DDR DIMM2 (FCH_SMB0) | 1001-001xb | 92 |
| WLAN (FCH_SMB0) | | |

## FCH Hudson-M3L USB Port List

| | |
|---|---|
| USB1.1 | |
| Port0 | NC |
| Port1 | NC |
| USB2.0 | |
| Port0 | Right USB |
| Port1 | Right USB |
| Port2 | Mini-PCIE |
| Port3 | USB Camera |
| Port4 | NC |
| Port5 | CardReader |
| Port6 | BT |
| Port7 | NC |
| Port8 | NC |
| Port9 | NC |
| Port10 | Left USB1 |
| Port11 | Left USB2 |
| Port12 | NC |
| Port13 | NC |

## Brazos PCIE Port List

| | | |
|---|---|---|
| APU | PCIE0 | GPU PCIE x4 |
| | PCIE1 | |
| | PCIE2 | |
| | PCIE3 | |
| FCH | PCIE0 | LAN |
| | PCIE1 | WLAN |
| | PCIE2 | NC |
| | PCIE3 | NC |

## FCH Hudson-M3L SATA Port List

| | |
|---|---|
| SATA0 | HDD |
| SATA1 | ODD |
| SATA2 | NC |
| SATA3 | NC |
| SATA4 | NC |
| SATA5 | NC |

## BOM Structure

UMA@ : UMA only
PX@ : DIS muxluss PX 4.0
Robson@ : Robson GPU
GIGA@ : RTL8111 1000
8105@ : RTL8105 10/100
DIMM@ : DIMM select
CMOS@ : USB camera
BT@ : BT function
ME@ : ME components
X76@, H1G@, H512@, S1G@, S512@ : VRAM
45@ : 45 Level
HDMI@ : HDMI function
non HDMI@ : HDMI function

AN@ : Apple + Nokia ear phone combo
A@ : Apple ear phone
PCB@ : PCB PN
14@ : 14"
15@ : 15"
BBH@ : BBH
nonBBH@@ : nonBBH@

| | | | |
|---|---|---|---|
| Security Classification | Compal Secret Data | | Compal Electronics, Inc. |
| Issued Date | 2010/06/30 | Deciphered Date 2012/06/30 | Title: Notes List |
| | | | Size B / Document Number LA8681P / Rev 1.0 |
| | | | Date: Tuesday, November 29, 2011 / Sheet 3 of 48 |

THIS SHEET OF ENGINEERING DRAWING IS THE PROPRIETARY PROPERTY OF COMPAL ELECTRONICS, INC. AND CONTAINS CONFIDENTIAL AND TRADE SECRET INFORMATION. THIS SHEET MAY NOT BE TRANSFERED FROM THE CUSTODY OF THE COMPETENT DIVISION OF R&D DEPARTMENT EXCEPT AS AUTHORIZED BY COMPAL ELECTRONICS, INC. NEITHER THIS SHEET NOR THE INFORMATION IT CONTAINS MAY BE USED BY OR DISCLOSED TO ANY THIRD PARTY WITHOUT PRIOR WRITTEN CONSENT OF COMPAL ELECTRONICS, INC.

## Power-Up/Down Sequence

**1. All the ASIC supplies must fully reach their respective nominal voltages within 20 ms of the start of the ramp-up sequence, though a shorter ramp-up duration is preferred.**

**2. VDDR3 should ramp-up before or simultaneously with VDDC.**

**3. For LVDS, DPx_VDD10 should ramp-up before DPx_VDD18 and the PCIe Reference clock should begin before DPx_VDD18. For power-down, DPx_VDD18 should ramp-down before DPx_VDD10.**

**4. The external pull-ups on the DDC/AUX signals (if applicable) should ramp-up before or after both VDDC and VDD_CT have ramped up.**

**5.VDDC and VDD_CT should not ramp-up simultaneously. (e.g., VDDC should reach 90% before VDD_CT starts to ramp-up (or vice versa).)**

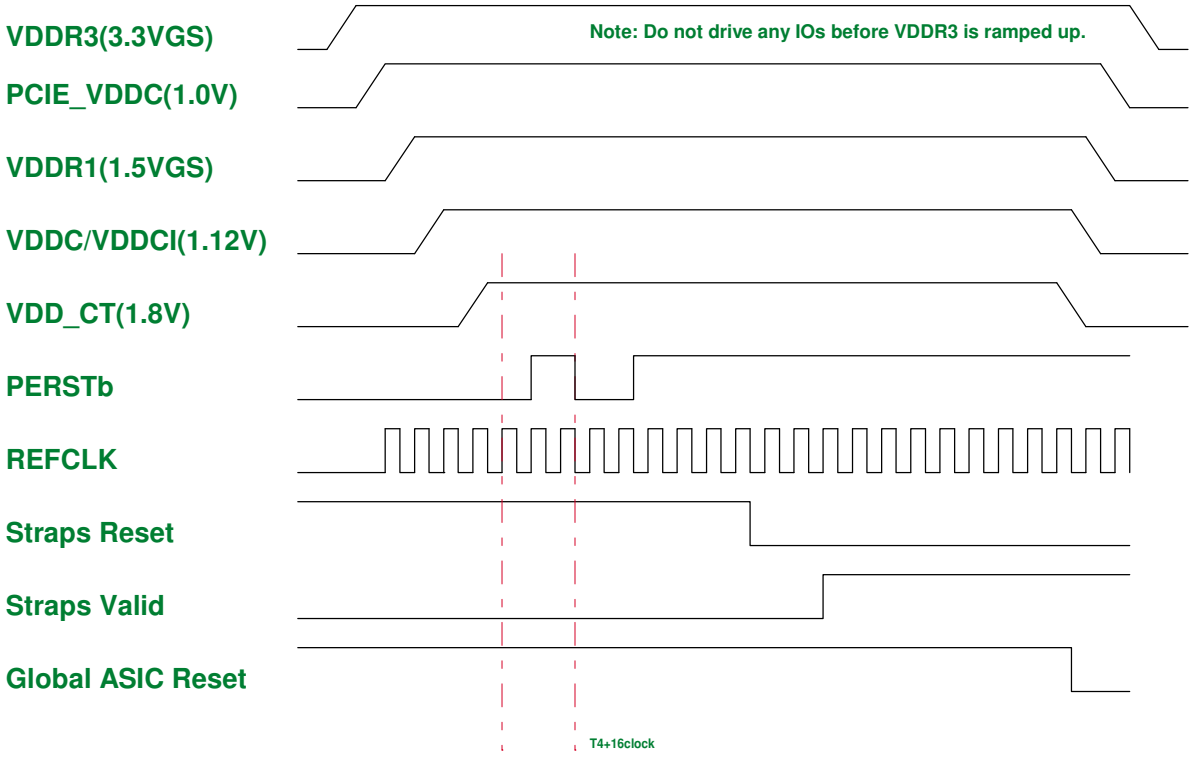


### Without BACO option :

PXS_RST# : Low -> Reset dGPU ; High ->Normal operation
PXS_PWREN : Low -> dGPU Power OFF ; High -> dGPU Power ON

### BACO option :

PXS_RST# : High ->Normal operation (dGPU is not reset on BACO mode)
PXS_PWREN : Low -> dGPU Power OFF ; High -> dGPU Power ON (always High)

| dGPU Power Pins | Voltage | PX 3.0 | BACO Mode | Max current |
|---|---|---|---|---|
| PCIE_PVDD, PCIE_VDDR, TSVDD, VDDR4, VDD_CT, DPE_PVDD, DP[F:E]_VDD18, DP[D:A]_PVDD, DP[D:A]_VDD18, AVDD, VDD1DI, A2VDDQ, VDD2DI, DPLL_PVDD, MPV18, and SPV18 | 1.8V | OFF | ON | ~~1679mA~~ |
| DP[F:E]_VDD10, DP[D:A]_VDD10, DPLL_VDDC, and SPV10 | 1.0V | OFF | ON | 575mA |
| PCIE_VDDC | 1.0V | OFF | ON | 2A |
| VDDR3 , and A2VDD | 3.3V | OFF | ON | 190mA |
| BIF_VDDC (current consumption = 55mA@1.0V, in BACO mode)<br>BIF_VDDC=VGA_CORE When GPU enable<br>BIF_VDDC=1.0V When BACO | Same as VDDC | OFF | ON<br>Same as PCIE_VDDC | 70mA |
| VDDR1 | 1.5V | OFF | OFF | 2.8A |
| VDDC/VDDCI | 1.12V | OFF | OFF | 12.9A |

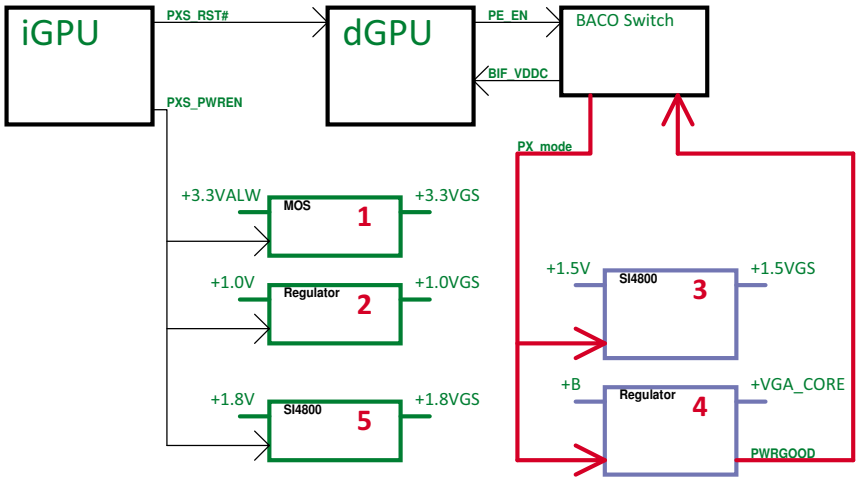


| Security Classification | Compal Secret Data | | |
|---|---|---|---|
| Issued Date | 2010/06/30 | Deciphered Date | 2012/07/14 |

THIS SHEET OF ENGINEERING DRAWING IS THE PROPRIETARY PROPERTY OF COMPAL ELECTRONICS, INC. AND CONTAINS CONFIDENTIAL AND TRADE SECRET INFORMATION. THIS SHEET MAY NOT BE TRANSFERED FROM THE CUSTODY OF THE COMPETENT DIVISION OF R&D DEPARTMENT EXCEPT AS AUTHORIZED BY COMPAL ELECTRONICS, INC. NEITHER THIS SHEET NOR THE INFORMATION IT CONTAINS MAY BE USED BY OR DISCLOSED TO ANY THIRD PARTY WITHOUT PRIOR WRITTEN CONSENT OF COMPAL ELECTRONICS, INC.

**Compal Electronics, Inc.**

Title: dGPU Block Diagram

Size: B | Document Number: LA8681P | Rev: 1.0

Date: Tuesday, November 29, 2011 | Sheet 4 of 48

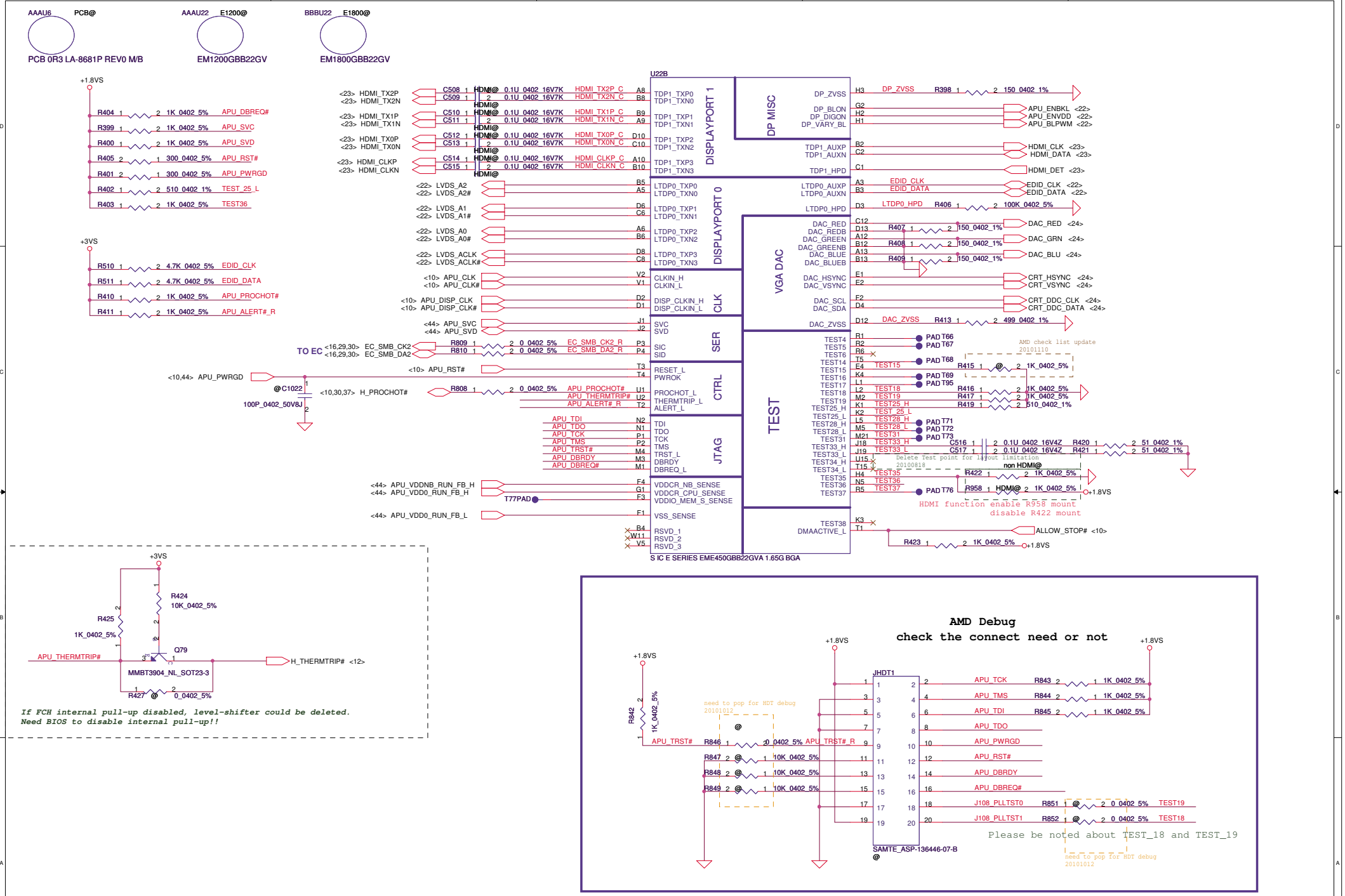


| Security Classification | Compal Secret Data | | |
|---|---|---|---|
| Issued Date | 2010/06/30 | Deciphered Date | 2012/06/30 |

THIS SHEET OF ENGINEERING DRAWING IS THE PROPRIETARY PROPERTY OF COMPAL ELECTRONICS, INC. AND CONTAINS CONFIDENTIAL AND TRADE SECRET INFORMATION. THIS SHEET MAY NOT BE TRANSFERED FROM THE CUSTODY OF THE COMPETENT DIVISION OF R&D DEPARTMENT EXCEPT AS AUTHORIZED BY COMPAL ELECTRONICS, INC. NEITHER THIS SHEET NOR THE INFORMATION IT CONTAINS MAY BE USED BY OR DISCLOSED TO ANY THIRD PARTY WITHOUT PRIOR WRITTEN CONSENT OF COMPAL ELECTRONICS, INC.

**Compal Electronics, Inc.**

Title: FT1 CTRL/DP/CRT

Size: Custom | Document Number: LA8681P | Rev: 1.0

Date: Wednesday, November 30, 2011 | Sheet 5 of 48

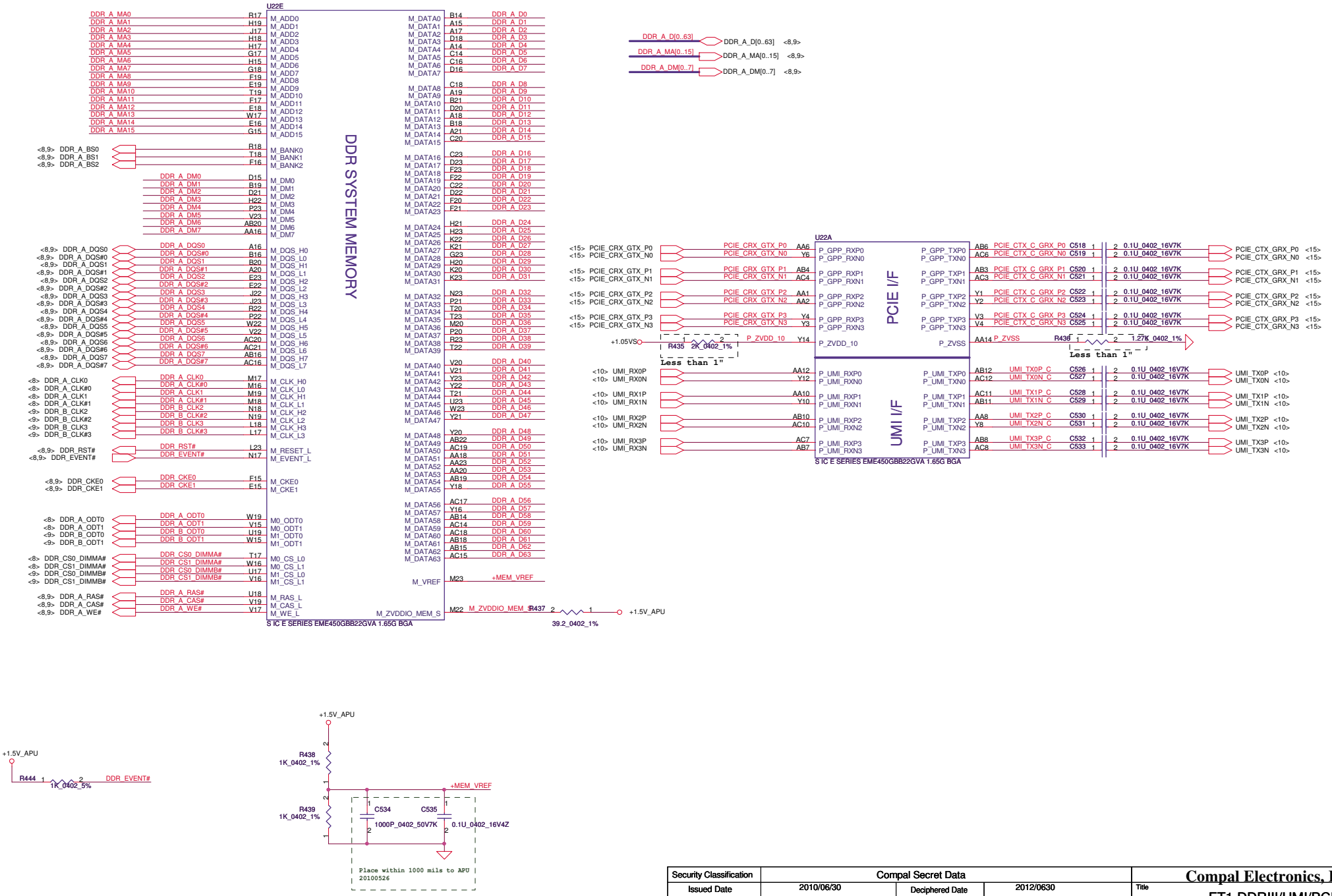


| Security Classification | Compal Secret Data | | |
|---|---|---|---|
| Issued Date | 2010/06/30 | Deciphered Date | 2012/0630 |

THIS SHEET OF ENGINEERING DRAWING IS THE PROPRIETARY PROPERTY OF COMPAL ELECTRONICS, INC. AND CONTAINS CONFIDENTIAL AND TRADE SECRET INFORMATION. THIS SHEET MAY NOT BE TRANSFERED FROM THE CUSTODY OF THE COMPETENT DIVISION OF R&D DEPARTMENT EXCEPT AS AUTHORIZED BY COMPAL ELECTRONICS, INC. NEITHER THIS SHEET NOR THE INFORMATION IT CONTAINS MAY BE USED BY OR DISCLOSED TO ANY THIRD PARTY WITHOUT PRIOR WRITTEN CONSENT OF COMPAL ELECTRONICS, INC.

**Compal Electronics, Inc.**

Title: FT1 DDRIII/UMI/PCIE

| Size | Document Number | Rev |
|---|---|---|
| Custom | LA8681P | 1.0 |

Date: Wednesday, November 30, 2011 | Sheet 6 of 48

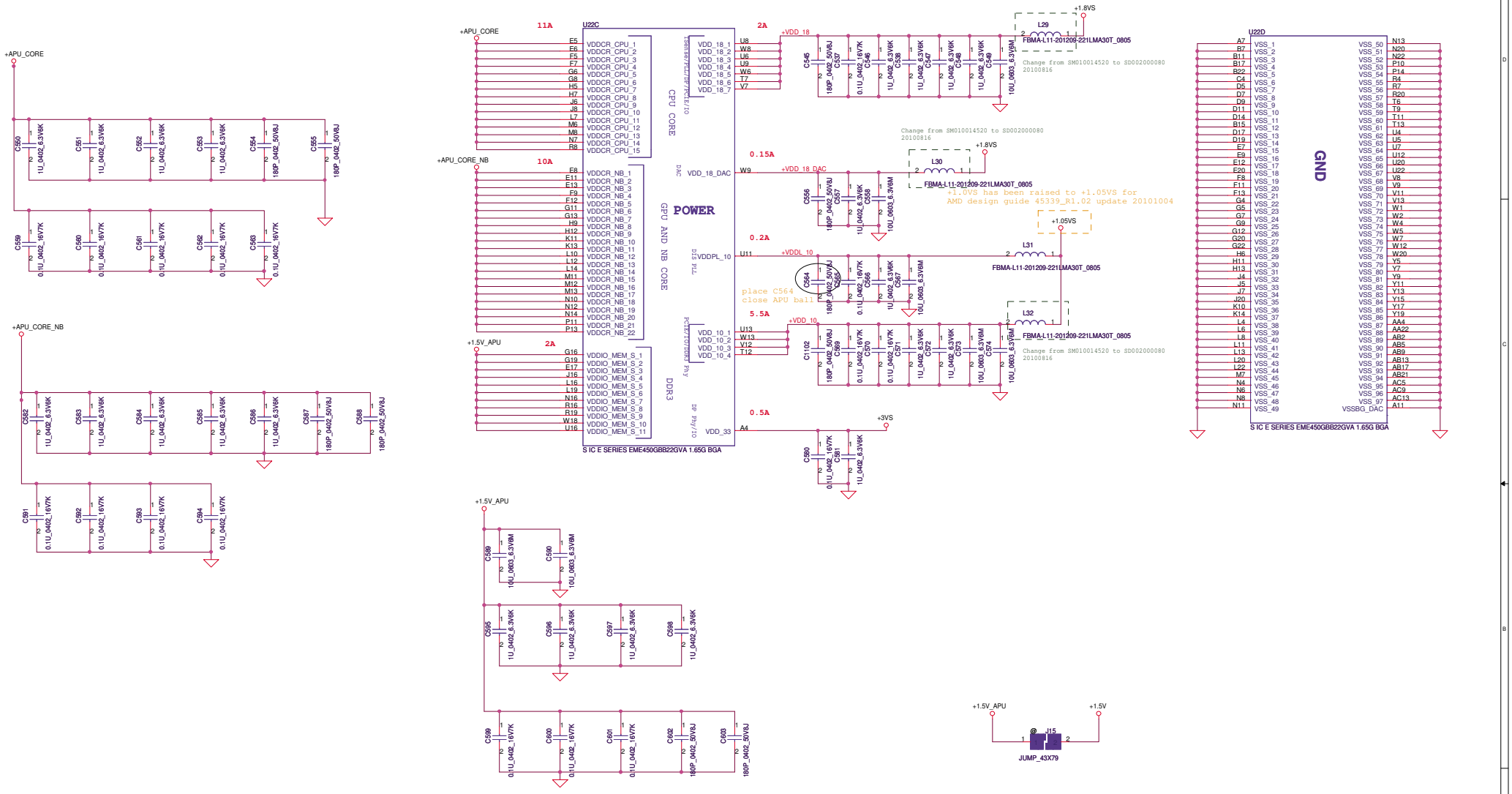


| Security Classification | Compal Secret Data | | |
|---|---|---|---|
| Issued Date | 2010/06/30 | Deciphered Date | 2012/06/30 |

THIS SHEET OF ENGINEERING DRAWING IS THE PROPRIETARY PROPERTY OF COMPAL ELECTRONICS, INC. AND CONTAINS CONFIDENTIAL AND TRADE SECRET INFORMATION. THIS SHEET MAY NOT BE TRANSFERED FROM THE CUSTODY OF THE COMPETENT DIVISION OF R&D DEPARTMENT EXCEPT AS AUTHORIZED BY COMPAL ELECTRONICS, INC. NEITHER THIS SHEET NOR THE INFORMATION IT CONTAINS MAY BE USED BY OR DISCLOSED TO ANY THIRD PARTY WITHOUT PRIOR WRITTEN CONSENT OF COMPAL ELECTRONICS, INC.

**Compal Electronics, Inc.**

Title: P07-FT1 PWR/VSS

| Size | Document Number | Rev |
|---|---|---|
| C | LA8681P | 1.0 |

Date: Tuesday, November 29, 2011 | Sheet 7 of 48

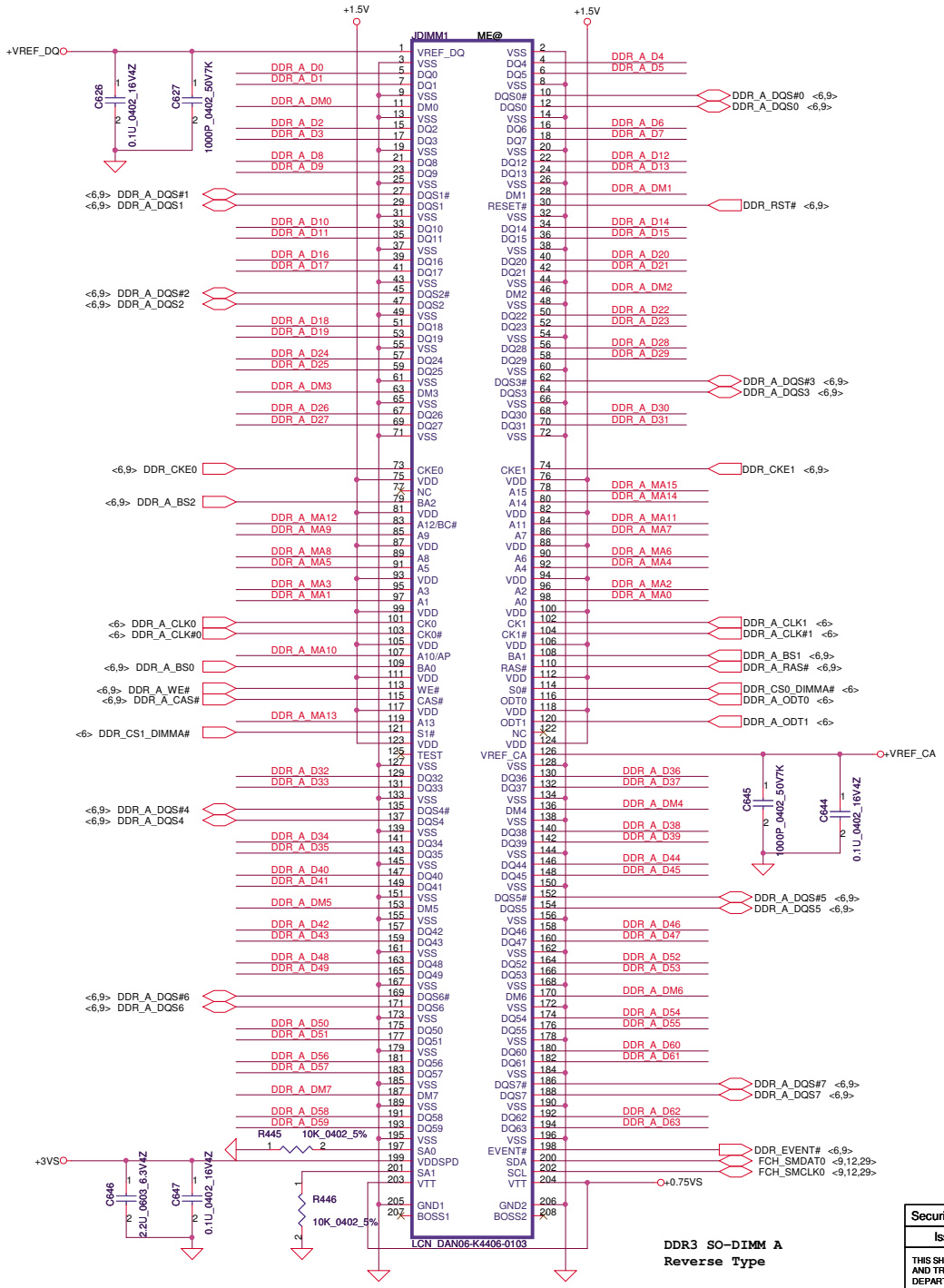


DDR3 SO-DIMM A
Reverse Type

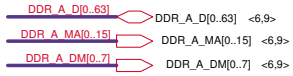


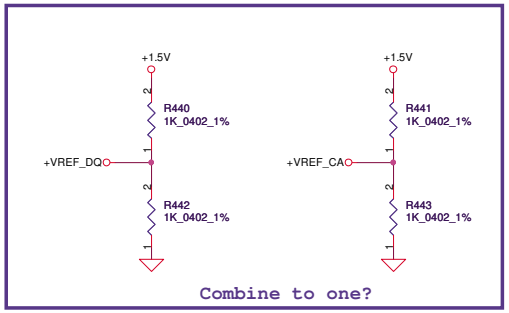


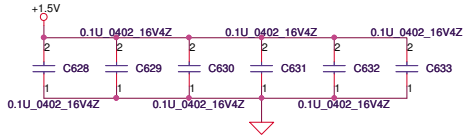


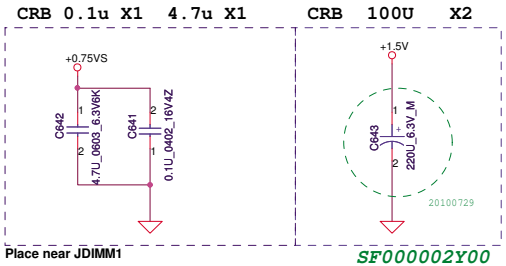


| Security Classification | Compal Secret Data | | |
|---|---|---|---|
| Issued Date | 2010/06/30 | Deciphered Date | 2012/06/30 |

THIS SHEET OF ENGINEERING DRAWING IS THE PROPRIETARY PROPERTY OF COMPAL ELECTRONICS, INC. AND CONTAINS CONFIDENTIAL AND TRADE SECRET INFORMATION. THIS SHEET MAY NOT BE TRANSFERED FROM THE CUSTODY OF THE COMPETENT DIVISION OF R&D DEPARTMENT EXCEPT AS AUTHORIZED BY COMPAL ELECTRONICS, INC. NEITHER THIS SHEET NOR THE INFORMATION IT CONTAINS MAY BE USED BY OR DISCLOSED TO ANY THIRD PARTY WITHOUT PRIOR WRITTEN CONSENT OF COMPAL ELECTRONICS, INC.

**Compal Electronics, Inc.**

Title: DDR3 SODIMM-I Socket

Size: Custom | Document Number: LA8681P | Rev: 1.0

Date: Wednesday, November 30, 2011 | Sheet 8 of 48

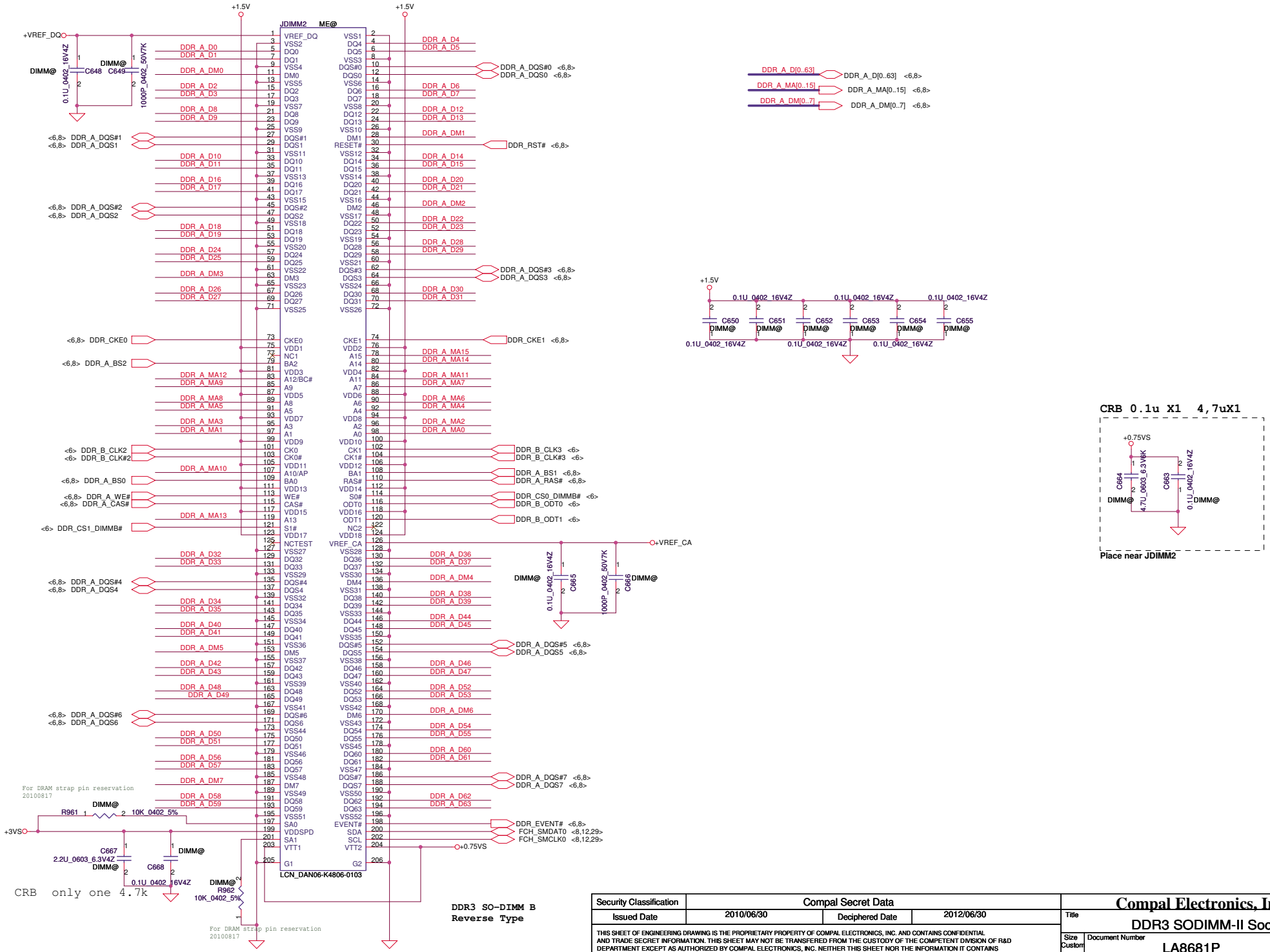


| Security Classification | Compal Secret Data | | |
|---|---|---|---|
| Issued Date | 2010/06/30 | Deciphered Date | 2012/06/30 |

THIS SHEET OF ENGINEERING DRAWING IS THE PROPRIETARY PROPERTY OF COMPAL ELECTRONICS, INC. AND CONTAINS CONFIDENTIAL AND TRADE SECRET INFORMATION. THIS SHEET MAY NOT BE TRANSFERED FROM THE CUSTODY OF THE COMPETENT DIVISION OF R&D DEPARTMENT EXCEPT AS AUTHORIZED BY COMPAL ELECTRONICS, INC. NEITHER THIS SHEET NOR THE INFORMATION IT CONTAINS MAY BE USED BY OR DISCLOSED TO ANY THIRD PARTY WITHOUT PRIOR WRITTEN CONSENT OF COMPAL ELECTRONICS, INC.

**Compal Electronics, Inc.**

Title: DDR3 SODIMM-II Socket

Size: Custom | Document Number: LA8681P | Rev: 1.0

Date: Wednesday, November 30, 2011 | Sheet 9 of 48

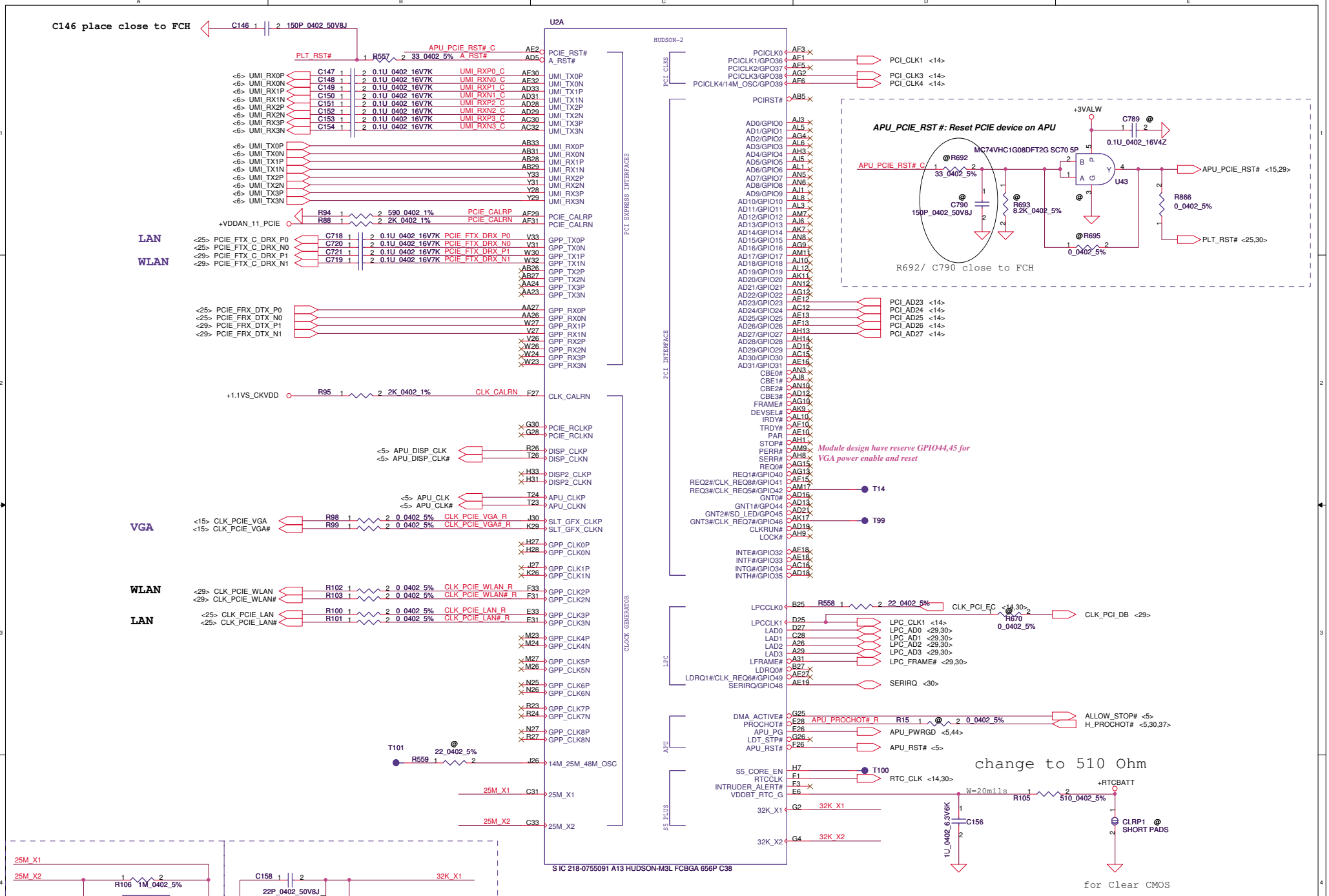


| Security Classification | Compal Secret Data | | |
|---|---|---|---|
| Issued Date | 2011/10/12 | Deciphered Date | 2013/10/12 |

THIS SHEET OF ENGINEERING DRAWING IS THE PROPRIETARY PROPERTY OF COMPAL ELECTRONICS, INC. AND CONTAINS CONFIDENTIAL AND TRADE SECRET INFORMATION. THIS SHEET MAY NOT BE TRANSFERED FROM THE CUSTODY OF THE COMPETENT DIVISION OF R&D DEPARTMENT EXCEPT AS AUTHORIZED BY COMPAL ELECTRONICS, INC. NEITHER THIS SHEET NOR THE INFORMATION IT CONTAINS MAY BE USED BY OR DISCLOSED TO ANY THIRD PARTY WITHOUT PRIOR WRITTEN CONSENT OF COMPAL ELECTRONICS, INC.

**Compal Electronics, Inc.**

Title: FCH PCIE/CLK/PCI/LPC/RTC

Size: Custom | Document Number: LA8681P | Rev: 0.1

Date: Wednesday, November 30, 2011 | Sheet 10 of 48

# 4MB SPI ROM
# & Non-share ROM.

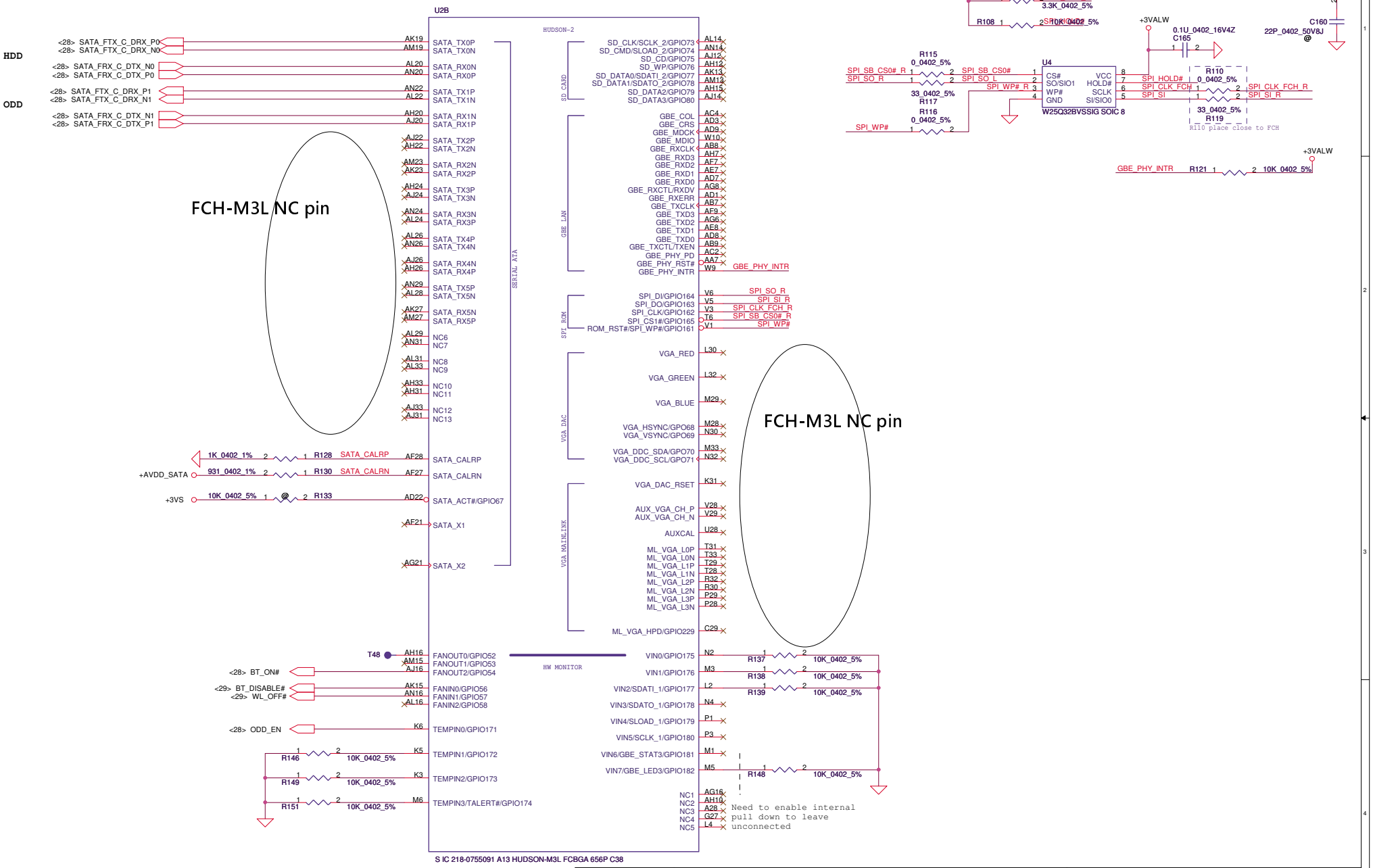


S IC 218-0755091 A13 HUDSON-M3L FCBGA 656P C38

| Security Classification | Compal Secret Data | | |
|---|---|---|---|
| Issued Date | 2011/10/12 | Deciphered Date | 2013/10/12 |

THIS SHEET OF ENGINEERING DRAWING IS THE PROPRIETARY PROPERTY OF COMPAL ELECTRONICS, INC. AND CONTAINS CONFIDENTIAL AND TRADE SECRET INFORMATION. THIS SHEET MAY NOT BE TRANSFERED FROM THE CUSTODY OF THE COMPETENT DIVISION OF R&D DEPARTMENT EXCEPT AS AUTHORIZED BY COMPAL ELECTRONICS, INC. NEITHER THIS SHEET NOR THE INFORMATION IT CONTAINS MAY BE USED BY OR DISCLOSED TO ANY THIRD PARTY WITHOUT PRIOR WRITTEN CONSENT OF COMPAL ELECTRONICS, INC.

Compal Electronics, Inc.

Title: FCH SATA/SPI/VGA/HWM/SD

Size: Custom | Document Number: LA8681P | Rev: 0.1

Date: Wednesday, November 30, 2011 | Sheet 11 of 48

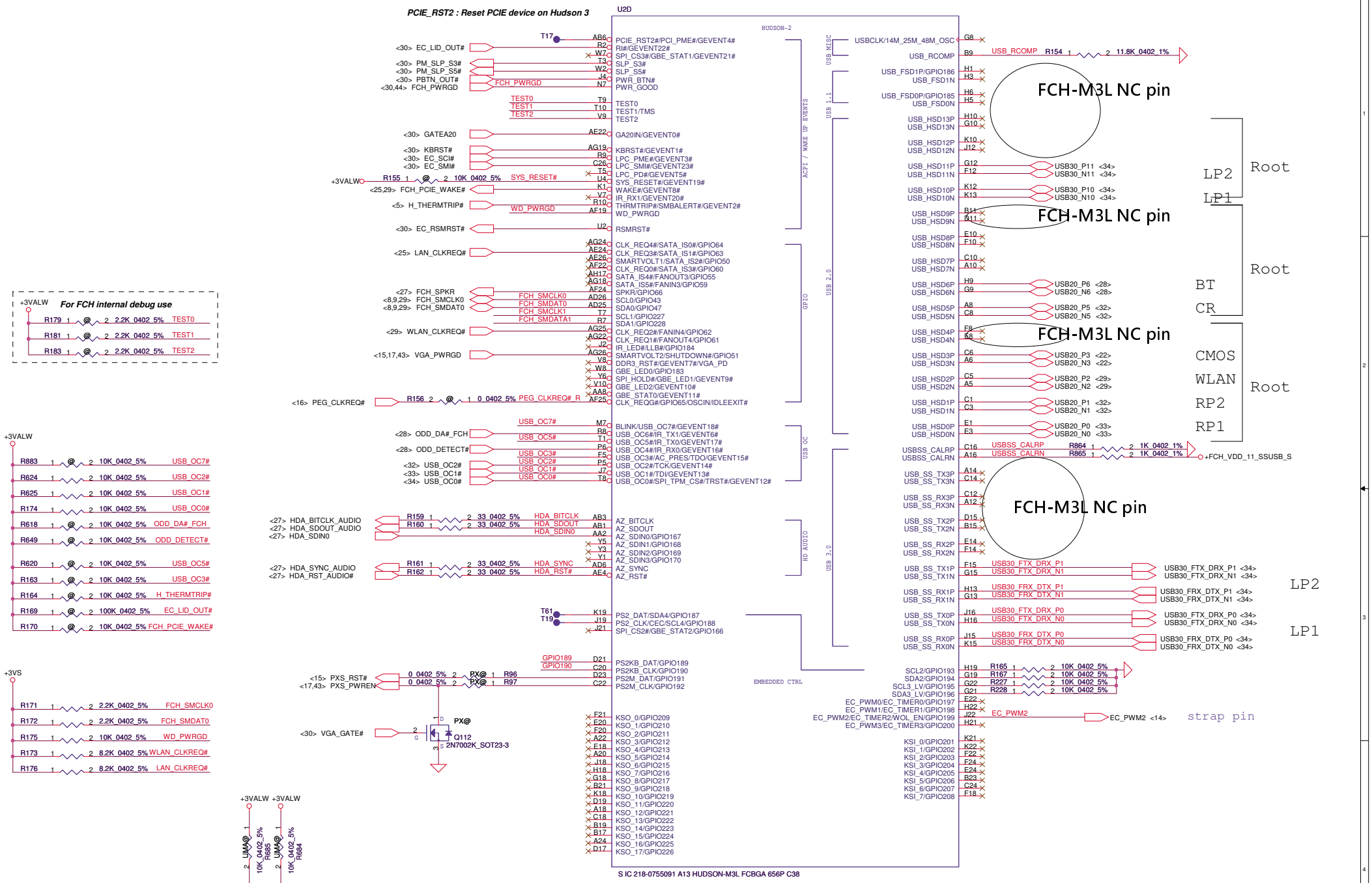


| BOARD Config. | GPIO189 | GPIO190 | Function |
|---|---|---|---|
| | 0 | 0 | PX4 Full |
| | 0 | 1 | PX4 low |
| | 1 | 0 | UMA Low |
| | 1 | 1 | UMA Full |

| Security Classification | Compal Secret Data | | |
|---|---|---|---|
| Issued Date | 2011/10/12 | Deciphered Date | 2013/10/12 |

THIS SHEET OF ENGINEERING DRAWING IS THE PROPRIETARY PROPERTY OF COMPAL ELECTRONICS, INC. AND CONTAINS CONFIDENTIAL AND TRADE SECRET INFORMATION. THIS SHEET MAY NOT BE TRANSFERED FROM THE CUSTODY OF THE COMPETENT DIVISION OF R&D DEPARTMENT EXCEPT AS AUTHORIZED BY COMPAL ELECTRONICS, INC. NEITHER THIS SHEET NOR THE INFORMATION IT CONTAINS MAY BE USED BY OR DISCLOSED TO ANY THIRD PARTY WITHOUT PRIOR WRITTEN CONSENT OF COMPAL ELECTRONICS, INC.

Compal Electronics, Inc.

Title: FCH-ACPI/USB/HDA/GPIO

Size: Custom | Document Number: LA8681P | Rev: 0.1

Date: Wednesday, November 30, 2011 | Sheet 12 of 48

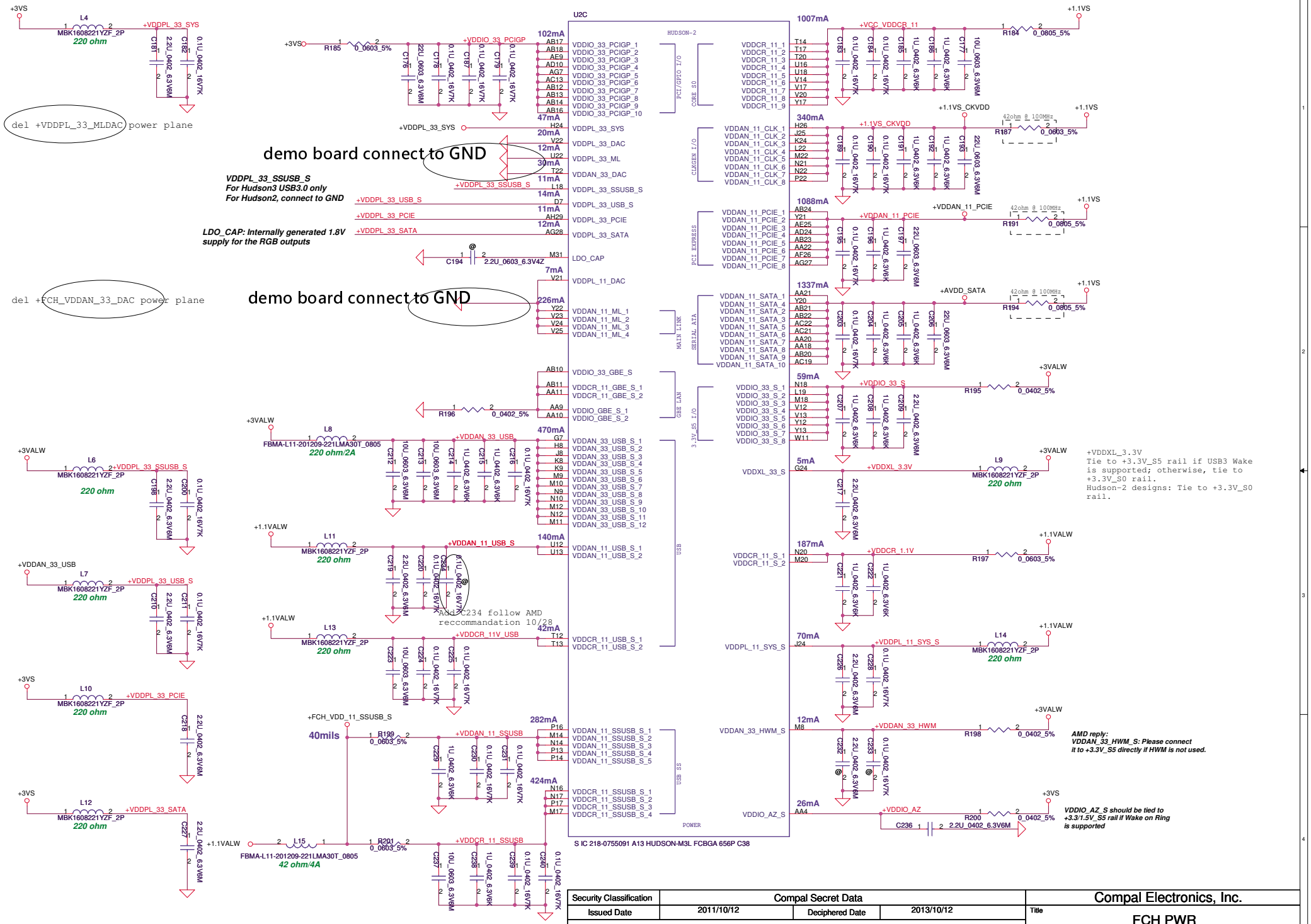


| Security Classification | Compal Secret Data | | |
|---|---|---|---|
| Issued Date | 2011/10/12 | Deciphered Date | 2013/10/12 |

THIS SHEET OF ENGINEERING DRAWING IS THE PROPRIETARY PROPERTY OF COMPAL ELECTRONICS, INC. AND CONTAINS CONFIDENTIAL AND TRADE SECRET INFORMATION. THIS SHEET MAY NOT BE TRANSFERED FROM THE CUSTODY OF THE COMPETENT DIVISION OF R&D DEPARTMENT EXCEPT AS AUTHORIZED BY COMPAL ELECTRONICS, INC. NEITHER THIS SHEET NOR THE INFORMATION IT CONTAINS MAY BE USED BY OR DISCLOSED TO ANY THIRD PARTY WITHOUT PRIOR WRITTEN CONSENT OF COMPAL ELECTRONICS, INC.

Compal Electronics, Inc.

Title: FCH PWR

Size: Custom | Document Number: LA8681P | Rev: 0.1

Date: Tuesday, November 29, 2011 | Sheet 13 of 48

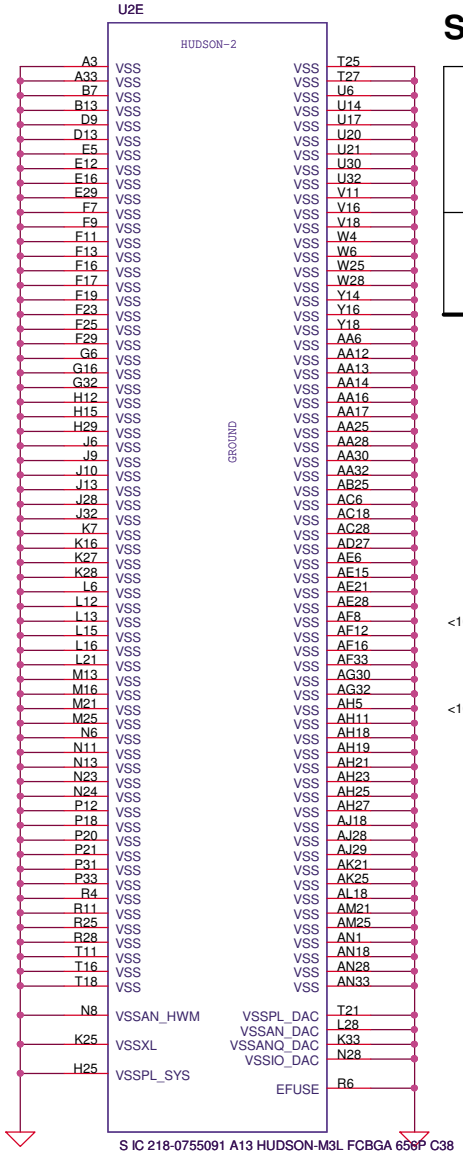


# STRAP PINS

| | PCI_CLK1 | PCI_CLK3 | PCI_CLK4 | LPC_CLK0_EC | LPC_CLK1 | EC_PWM2 | RTC_CLK |
|---|---|---|---|---|---|---|---|
| PULL HIGH | ALLOW PCIE GEN2 DEFAULT | USE DEBUG STRAPS | NON_FUSION CLOCK MODE | EC ENABLED | CLKGEN ENABLED DEFAULT | LPC ROM | S5 PLUS MODE DISABLED DEFAULT |
| PULL LOW | FORCE PCIE GEN1 | IGNORE DEBUG STRAP DEFAULT | FUSION CLOCK MODE DEFAULT | EC DISABLED DEFAULT | CLKGEN DISABLE | SPI ROM DEFAULT | S5 PLUS MODE ENABLED |

# DEBUG STRAPS

FCH HAS 15K INTERNAL PU FOR PCI_AD[27:23]

| | PCI_AD27 | PCI_AD26 | PCI_AD25 | PCI_AD24 | PCI_AD23 |
|---|---|---|---|---|---|
| PULL HIGH | USE PCI PLL DEFAULT | DISABLE ILA AUTORUN DEFAULT | USE FC PLL DEFAULT | USE DEFAULT PCIE STRAPS DEFAULT | DISABLE PCI MEM BOOT DEFAULT |
| PULL LOW | BYPASS PCI PLL | ENABLE ILA AUTORUN | BYPASS FC PLL | USE EEPROM PCIE STRAPS | ENABLE PCI MEM BOOT |

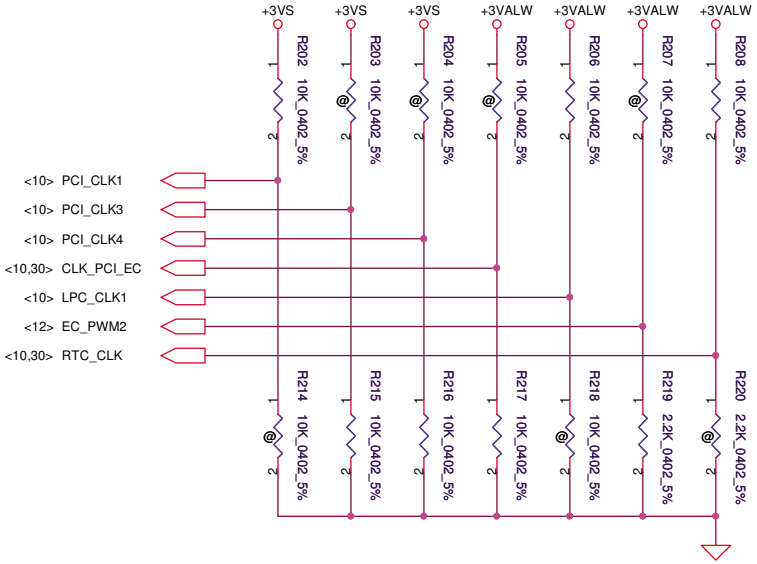


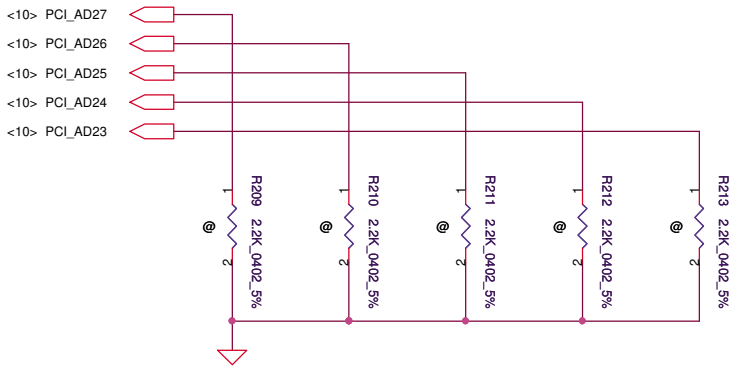


| Security Classification | Compal Secret Data | | |
|---|---|---|---|
| Issued Date | 2011/10/12 | Deciphered Date | 2013/10/12 |

THIS SHEET OF ENGINEERING DRAWING IS THE PROPRIETARY PROPERTY OF COMPAL ELECTRONICS, INC. AND CONTAINS CONFIDENTIAL AND TRADE SECRET INFORMATION. THIS SHEET MAY NOT BE TRANSFERED FROM THE CUSTODY OF THE COMPETENT DIVISION OF R&D DEPARTMENT EXCEPT AS AUTHORIZED BY COMPAL ELECTRONICS, INC. NEITHER THIS SHEET NOR THE INFORMATION IT CONTAINS MAY BE USED BY OR DISCLOSED TO ANY THIRD PARTY WITHOUT PRIOR WRITTEN CONSENT OF COMPAL ELECTRONICS, INC.

Compal Electronics, Inc.

Title: FCH-VSS/Strap

Size: B | Document Number: LA8681P | Rev: 0.1

Date: Wednesday, November 30, 2011 | Sheet 14 of 48

# LVDS Interface

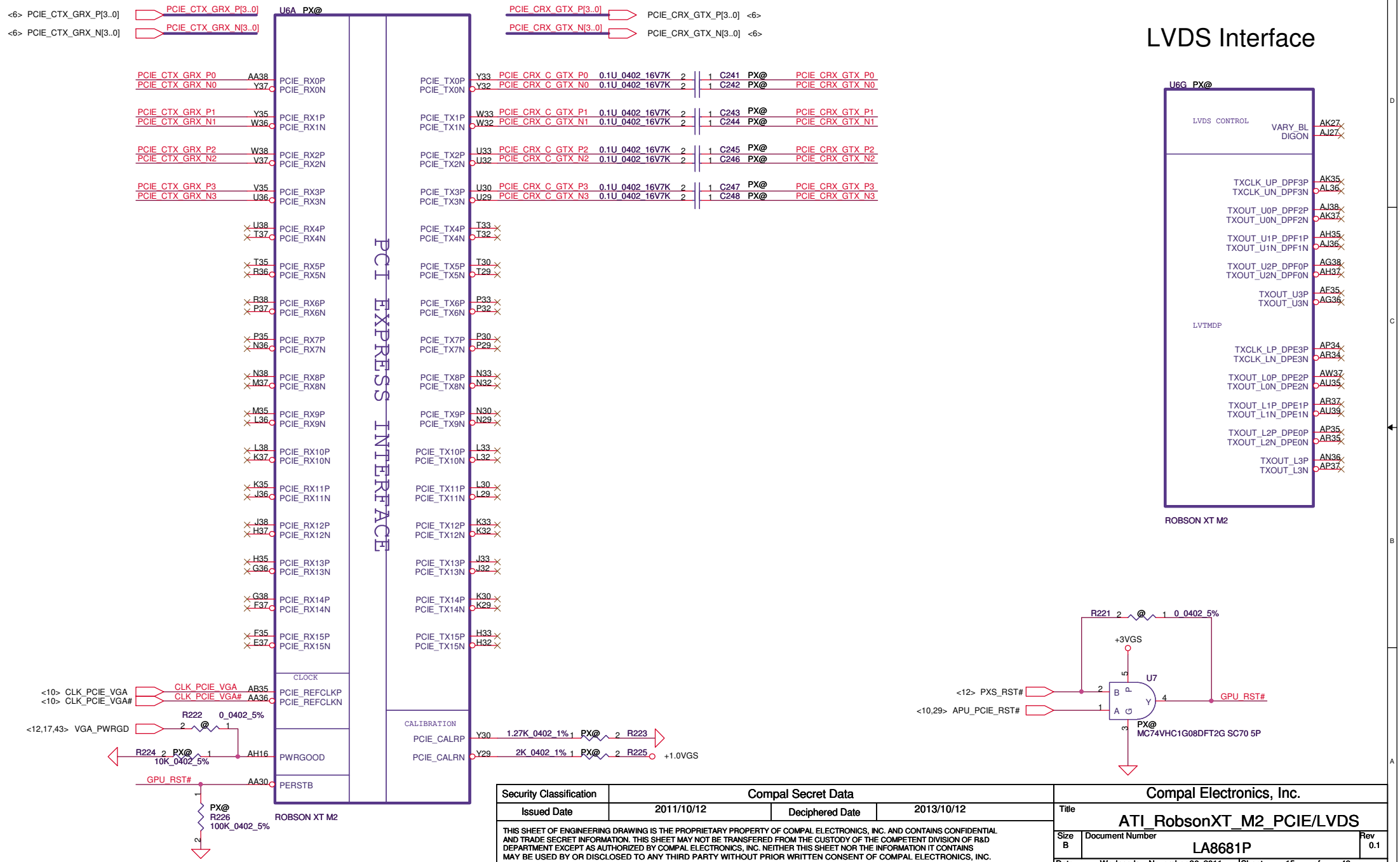


| Security Classification | Compal Secret Data | | |
|---|---|---|---|
| Issued Date | 2011/10/12 | Deciphered Date | 2013/10/12 |

THIS SHEET OF ENGINEERING DRAWING IS THE PROPRIETARY PROPERTY OF COMPAL ELECTRONICS, INC. AND CONTAINS CONFIDENTIAL AND TRADE SECRET INFORMATION. THIS SHEET MAY NOT BE TRANSFERED FROM THE CUSTODY OF THE COMPETENT DIVISION OF R&D DEPARTMENT EXCEPT AS AUTHORIZED BY COMPAL ELECTRONICS, INC. NEITHER THIS SHEET NOR THE INFORMATION IT CONTAINS MAY BE USED BY OR DISCLOSED TO ANY THIRD PARTY WITHOUT PRIOR WRITTEN CONSENT OF COMPAL ELECTRONICS, INC.

Compal Electronics, Inc.

Title: ATI_RobsonXT_M2_PCIE/LVDS

Size: B | Document Number: LA8681P | Rev: 0.1

Date: Wednesday, November 30, 2011 | Sheet 15 of 48

# CONFIGURATION STRAPS

**ALLOW FOR PULLUP PADS FOR THESE STRAPS AND IF THESE GPIOS ARE USED, THEY MUST NOT CONFLICT DURING RESET**

RECOMMENDED SETTINGS
0= DO NOT INSTALL RESISTOR
1 = INSTALL 10K RESISTOR
X = DESIGN DEPENDANT
NA = NOT APPLICABLE

| STRAPS | PIN | DESCRIPTION OF DEFAULT SETTINGS | RECOMMENDED SETTINGS |
|---|---|---|---|
| TX_PWRS_ENB | GPIO0 | PCIE FULL TX OUTPUT SWING 0: 50% swing 1: Full swing | X |
| TX_DEEMPH_EN | GPIO1 | PCIE TRANSMITTER DE-EMPHASIS 0: disable 1: enable | X |
| RSVD | GPIO2 | Advertises PCIE speed when compliance test 0: 2.5GT/s 1: 5GT/s | 0 |
| RSVD | GPIO8 | RESERVED | 0 |
| BIF_VGA DIS | GPIO9 | VGA ENABLED | 0 |
| RSVD | GPIO21 | RESERVED | 0 |
| BIOS_ROM_EN | GPIO_22_ROMCSB | ENABLE EXTERNAL BIOS ROM 0: disable 1: enable | X |
| ROMIDCFG(2:0) | GPIO[13:11] | SERIAL ROM TYPE OR MEMORY APERTURE SIZE SELECT | XXX |
| VIP_DEVICE_STRAP_ENA | V2SYNC | IGNORE VIP DEVICE STRAPS | 0 |
| RSVD | H2SYNC | | 0 |
| RSVD | GENERICC | | 0 |
| AUD[1]<br>AUD[0] | HSYNC<br>VSYNC | AUD[1] AUD[0]<br>0 0 No audio function<br>0 1 Audio for DisplayPort and HDMI if dongle is detected<br>1 0 Audio for DisplayPort only<br>1 1 Audio for both DisplayPort and HDMI | 11 |

# AMD RESERVED CONFIGURATION STRAPS

**ALLOW FOR PULLUP PADS FOR THESE STRAPS BUT DO NOT INSTALL RESISTOR. IF THESE GPIOS ARE USED, THEY MUST KEEP "LOW" AND NOT CONFLICT DURING RESET**

GPIO21 H2SYNC GENERICC GPIO2 GPIO8

| | | |
|---|---|---|
| TX_PWRS_ENB | GPIO0 | Transmitter Power Saving Enable<br>0: 50% Tx output swing for mobile mode<br>1: full Tx output swing (Default setting for Desktop) |
| TX_DEEMPH_EN | GPIO1 | PCI Express Transmitter De-emphasis Enable<br>0: Tx de-emphasis diabled for mobile mode<br>1: Tx de-emphasis enabled (Defailt setting for desktop) |

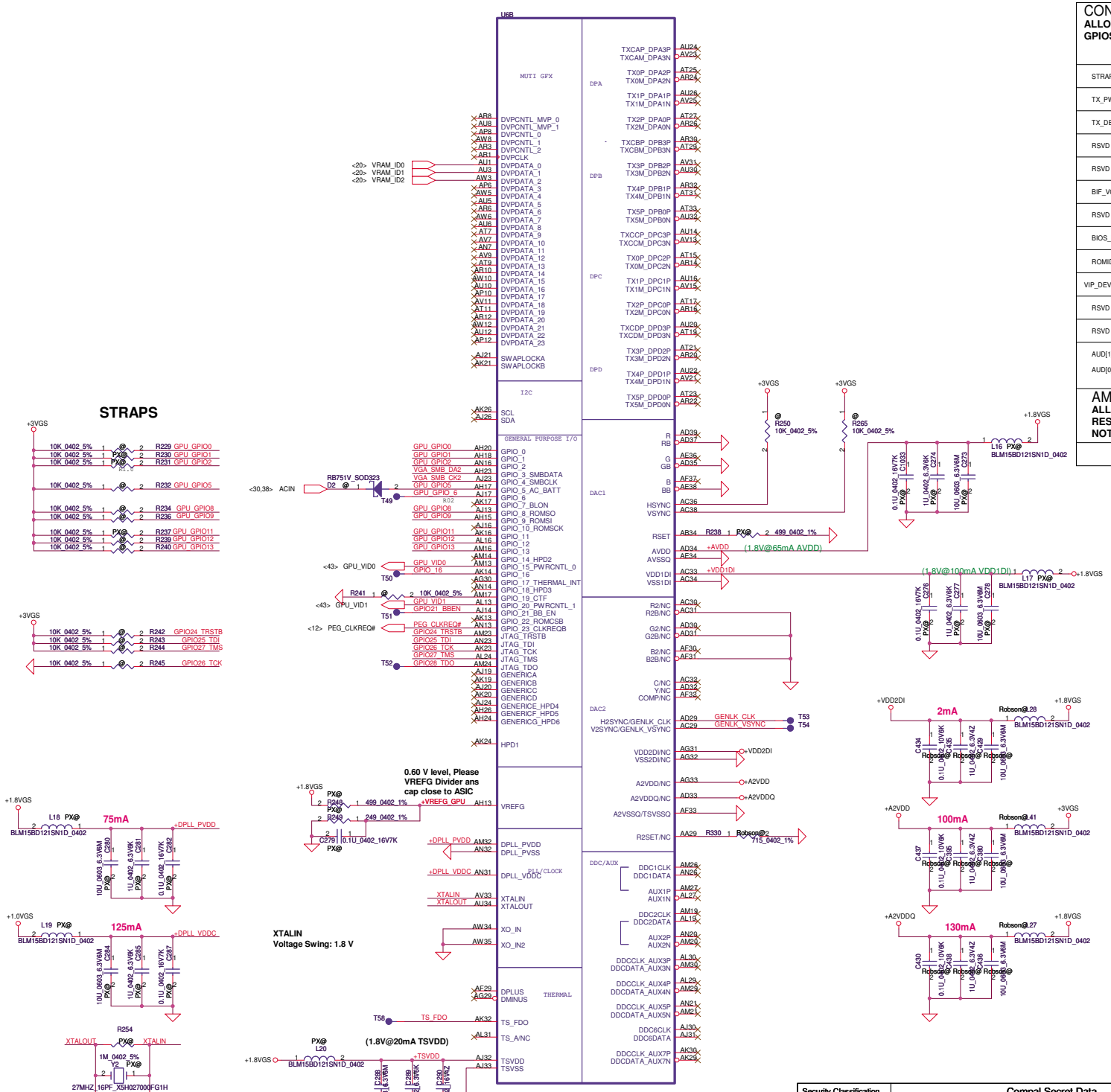


## Internal VGA Thermal Sensor

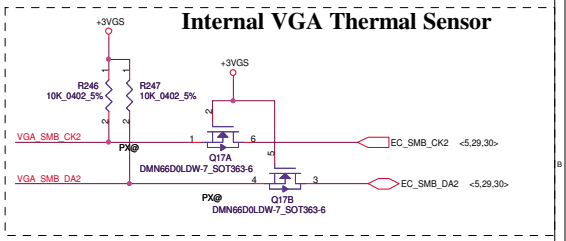


| Security Classification | Compal Secret Data | | |
|---|---|---|---|
| Issued Date | 2011/10/12 | Deciphered Date | 2013/10/12 |

THIS SHEET OF ENGINEERING DRAWING IS THE PROPRIETARY PROPERTY OF COMPAL ELECTRONICS, INC. AND CONTAINS CONFIDENTIAL AND TRADE SECRET INFORMATION. THIS SHEET MAY NOT BE TRANSFERED FROM THE CUSTODY OF THE COMPETENT DIVISION OF R&D DEPARTMENT EXCEPT AS AUTHORIZED BY COMPAL ELECTRONICS, INC. NEITHER THIS SHEET NOR THE INFORMATION IT CONTAINS MAY BE USED BY OR DISCLOSED TO ANY THIRD PARTY WITHOUT PRIOR WRITTEN CONSENT OF COMPAL ELECTRONICS, INC.

Compal Electronics, Inc.

Title: ATI_RobsonXT_M2_Main_MSIC

Size: C | Document Number: LA8681P | Rev: 0.1

Date: Wednesday, November 30, 2011 | Sheet 16 of 48

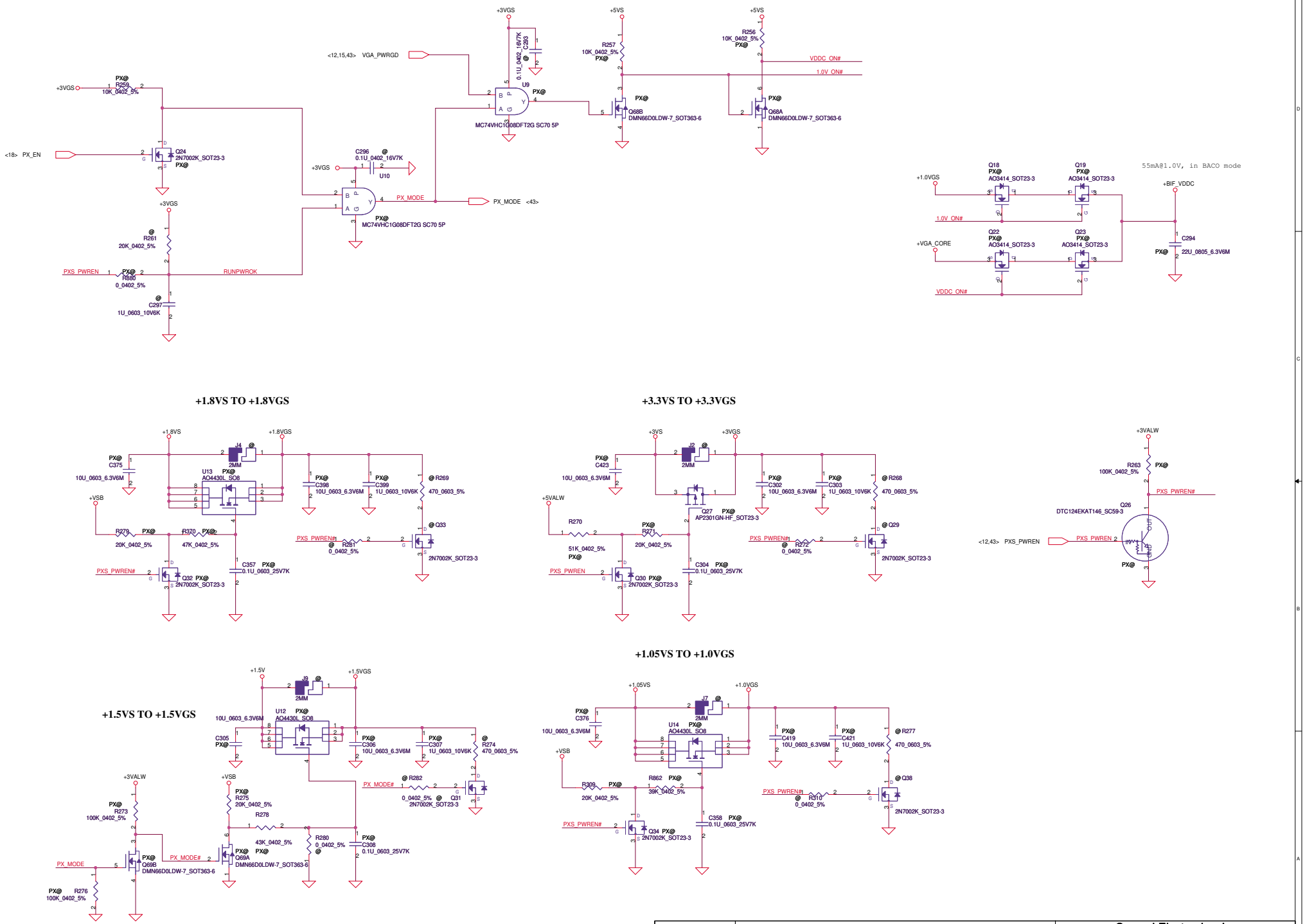


| Security Classification | Compal Secret Data | | |
|---|---|---|---|
| Issued Date | 2011/10/12 | Deciphered Date | 2013/10/12 |

THIS SHEET OF ENGINEERING DRAWING IS THE PROPRIETARY PROPERTY OF COMPAL ELECTRONICS, INC. AND CONTAINS CONFIDENTIAL AND TRADE SECRET INFORMATION. THIS SHEET MAY NOT BE TRANSFERED FROM THE CUSTODY OF THE COMPETENT DIVISION OF R&D DEPARTMENT EXCEPT AS AUTHORIZED BY COMPAL ELECTRONICS, INC. NEITHER THIS SHEET NOR THE INFORMATION IT CONTAINS MAY BE USED BY OR DISCLOSED TO ANY THIRD PARTY WITHOUT PRIOR WRITTEN CONSENT OF COMPAL ELECTRONICS, INC.

Compal Electronics, Inc.

Title: ATI_RobsonXT_M2_BACO POWER

Size: C | Document Number: LA8681P | Rev: 0.1

Date: Wednesday, November 30, 2011 | Sheet 17 of 48

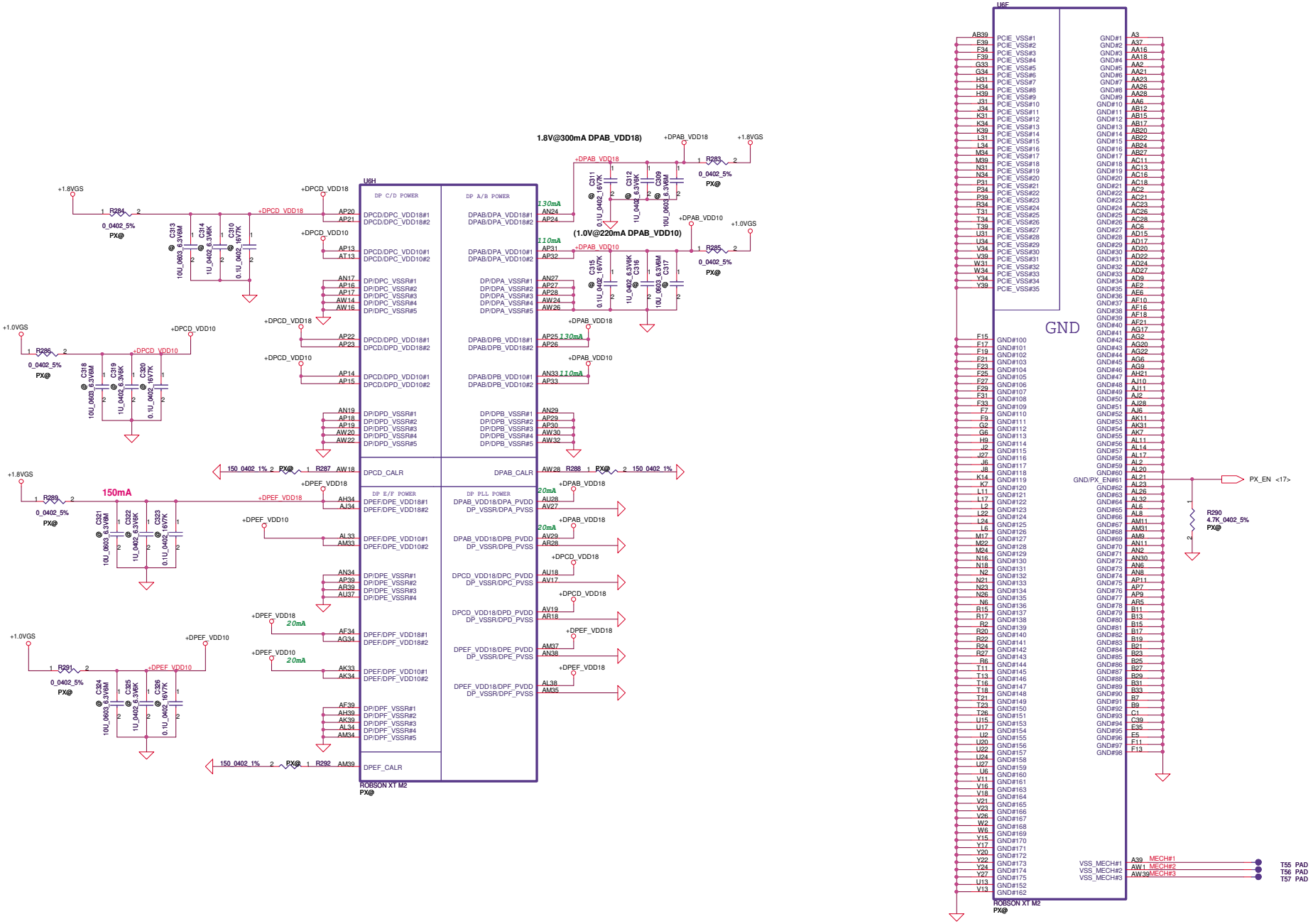


| Security Classification | Compal Secret Data | | | Compal Electronics, Inc. |
|---|---|---|---|---|
| Issued Date | 2011/10/12 | Deciphered Date | 2013/10/12 | Title: ATI_RobsonXT_M2_PWR_GND |
| | | | | Size: C; Document Number: LA8681P; Rev: 0.1 |
| | | | | Date: Wednesday, November 30, 2011; Sheet 18 of 48 |

THIS SHEET OF ENGINEERING DRAWING IS THE PROPRIETARY PROPERTY OF COMPAL ELECTRONICS, INC. AND CONTAINS CONFIDENTIAL AND TRADE SECRET INFORMATION. THIS SHEET MAY NOT BE TRANSFERED FROM THE CUSTODY OF THE COMPETENT DIVISION OF R&D DEPARTMENT EXCEPT AS AUTHORIZED BY COMPAL ELECTRONICS, INC. NEITHER THIS SHEET NOR THE INFORMATION IT CONTAINS MAY BE USED BY OR DISCLOSED TO ANY THIRD PARTY WITHOUT PRIOR WRITTEN CONSENT OF COMPAL ELECTRONICS, INC.

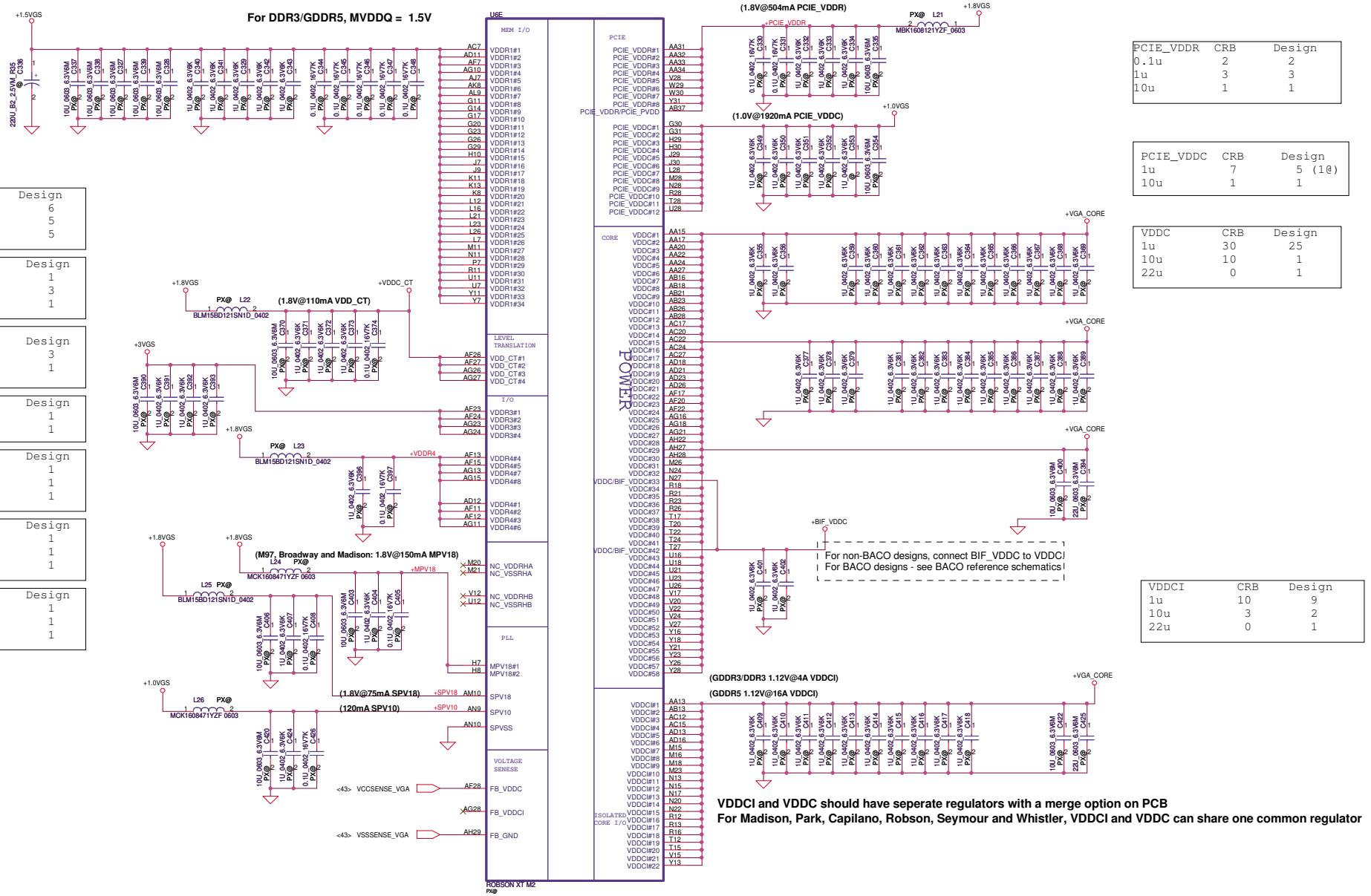


| VDDR1 | CRB | Design |
|---|---|---|
| 0.1u | 6 | 6 |
| 1u | 10 | 5 |
| 10u | 6 | 5 |

| VDD_CT | CRB | Design |
|---|---|---|
| 0.1u | 1 | 1 |
| 1u | 3 | 3 |
| 10u | 1 | 1 |

| VDDR3 | CRB | Design |
|---|---|---|
| 1u | 3 | 3 |
| 10u | 1 | 1 |

| VDDR4 | CRB | Design |
|---|---|---|
| 0.1u | 1 | 1 |
| 1u | 1 | 1 |

| MPV18 | CRB | Design |
|---|---|---|
| 0.1u | 2 | 1 |
| 1u | 2 | 1 |
| 10u | 1 | 1 |

| SPV18 | CRB | Design |
|---|---|---|
| 0.1u | 1 | 1 |
| 1u | 1 | 1 |
| 10u | 1 | 1 |

| SPV10 | CRB | Design |
|---|---|---|
| 0.1u | 1 | 1 |
| 1u | 1 | 1 |
| 10u | 1 | 1 |

| PCIE_VDDR | CRB | Design |
|---|---|---|
| 0.1u | 2 | 2 |
| 1u | 3 | 3 |
| 10u | 1 | 1 |

| PCIE_VDDC | CRB | Design |
|---|---|---|
| 1u | 7 | 5 (1@) |
| 10u | 1 | 1 |

| VDDC | CRB | Design |
|---|---|---|
| 1u | 30 | 25 |
| 10u | 10 | 1 |
| 22u | 0 | 1 |

| VDDCI | CRB | Design |
|---|---|---|
| 1u | 10 | 9 |
| 10u | 3 | 2 |
| 22u | 0 | 1 |

| Security Classification | Compal Secret Data | | |
|---|---|---|---|
| Issued Date | 2011/10/12 | Deciphered Date | 2013/10/12 |

THIS SHEET OF ENGINEERING DRAWING IS THE PROPRIETARY PROPERTY OF COMPAL ELECTRONICS, INC. AND CONTAINS CONFIDENTIAL AND TRADE SECRET INFORMATION. THIS SHEET MAY NOT BE TRANSFERED FROM THE CUSTODY OF THE COMPETENT DIVISION OF R&D DEPARTMENT EXCEPT AS AUTHORIZED BY COMPAL ELECTRONICS, INC. NEITHER THIS SHEET NOR THE INFORMATION IT CONTAINS MAY BE USED BY OR DISCLOSED TO ANY THIRD PARTY WITHOUT PRIOR WRITTEN CONSENT OF COMPAL ELECTRONICS, INC.

Compal Electronics, Inc.

Title: ATI_RobsonXT_M2_Power

Size: C | Document Number: LA8681P | Rev: 0.1

Date: Wednesday, November 30, 2011 | Sheet 19 of 48

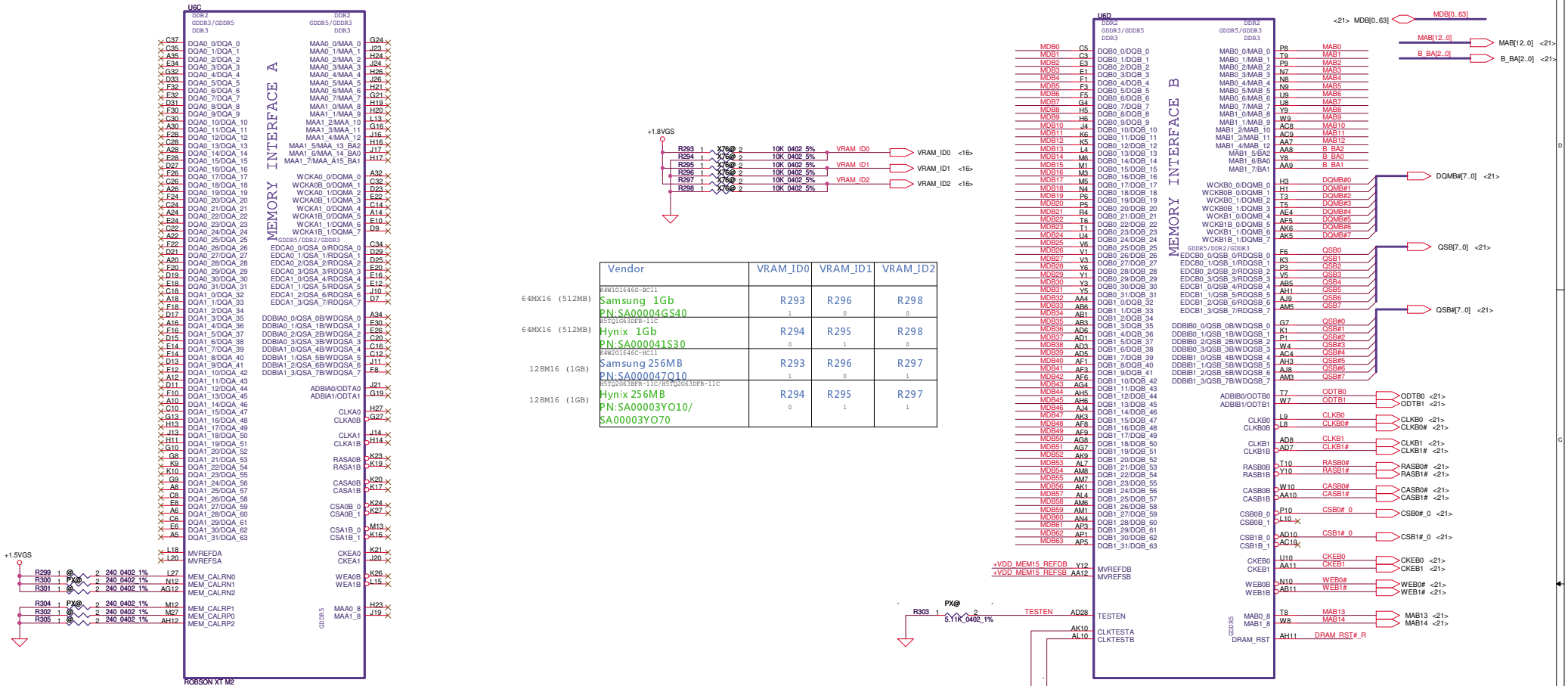


| Vendor | | VRAM_ID0 | VRAM_ID1 | VRAM_ID2 |
|---|---|---|---|---|
| 64MX16 (512MB) | K4W1G1646G-BC11 Samsung 1Gb PN:SA00004GS40 | R293 1 | R296 0 | R298 0 |
| 64MX16 (512MB) | H5TQ1G63DFR-11C Hynix 1Gb PN:SA000041S30 | R294 0 | R295 1 | R298 0 |
| 128M16 (1GB) | K4W2G1646C-HC11 Samsung 256MB PN:SA000047Q10 | R293 1 | R296 0 | R297 1 |
| 128M16 (1GB) | H5TQ2G63DFR-11C/H5TQ2G63DFR-11C Hynix 256MB PN:SA00003YO10/ SA00003YO70 | R294 0 | R295 1 | R297 1 |

PX@

| | Rosbon M2 |
|---|---|
| R299 | @ |
| R300 | POP |
| R301 | @ |
| R302 | @ |
| R304 | POP |
| R305 | @ |

This basic topology should be used for DRAM_RST for DDR3/GDDR5.These Capacitors and Resistor values are an example only. The Series R and || Cap values will depend on the DRAM load and will have to be calculated for different Memory ,DRAM Load and board to pass Reset Signal Spec.
Place all these components very close to GPU (Within 25mm) and keep all component close to each Other (within 5mm) except Rser2

| Security Classification | Compal Secret Data | | |
|---|---|---|---|
| Issued Date | 2011/10/12 | Deciphered Date | 2013/10/12 |

THIS SHEET OF ENGINEERING DRAWING IS THE PROPRIETARY PROPERTY OF COMPAL ELECTRONICS, INC. AND CONTAINS CONFIDENTIAL AND TRADE SECRET INFORMATION. THIS SHEET MAY NOT BE TRANSFERED FROM THE CUSTODY OF THE COMPETENT DIVISION OF R&D DEPARTMENT EXCEPT AS AUTHORIZED BY COMPAL ELECTRONICS, INC. NEITHER THIS SHEET NOR THE INFORMATION IT CONTAINS MAY BE USED BY OR DISCLOSED TO ANY THIRD PARTY WITHOUT PRIOR WRITTEN CONSENT OF COMPAL ELECTRONICS, INC.

Compal Electronics, Inc.

Title: ATI_RobsonXT_M2_MEM IF

| Size | Document Number | Rev |
|---|---|---|
| C | LA8681P | 0.1 |

Date: Wednesday, November 30, 2011 | Sheet 20 of 48

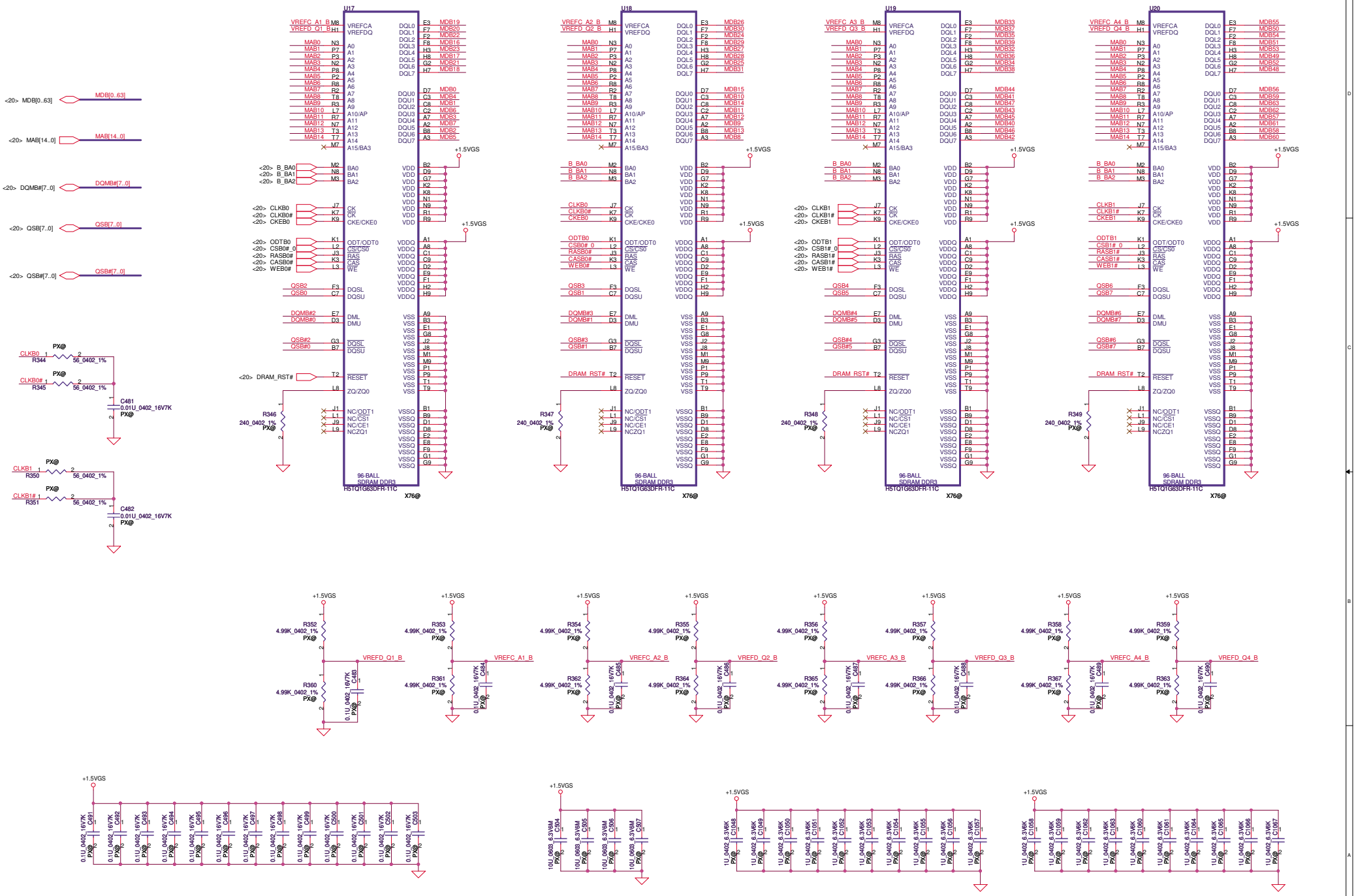


| Security Classification | Compal Secret Data | | |
|---|---|---|---|
| Issued Date | 2011/10/12 | Deciphered Date | 2013/10/12 |

THIS SHEET OF ENGINEERING DRAWING IS THE PROPRIETARY PROPERTY OF COMPAL ELECTRONICS, INC. AND CONTAINS CONFIDENTIAL AND TRADE SECRET INFORMATION. THIS SHEET MAY NOT BE TRANSFERED FROM THE CUSTODY OF THE COMPETENT DIVISION OF R&D DEPARTMENT EXCEPT AS AUTHORIZED BY COMPAL ELECTRONICS, INC. NEITHER THIS SHEET NOR THE INFORMATION IT CONTAINS MAY BE USED BY OR DISCLOSED TO ANY THIRD PARTY WITHOUT PRIOR WRITTEN CONSENT OF COMPAL ELECTRONICS, INC.

Compal Electronics, Inc.

Title: ATI_RobsonXT_M2_VRAM_B

| Size | Document Number | Rev |
|---|---|---|
| C | LA8681P | 0.1 |

Date: Wednesday, November 30, 2011 | Sheet 21 of 48

# LCD POWER CIRCUIT

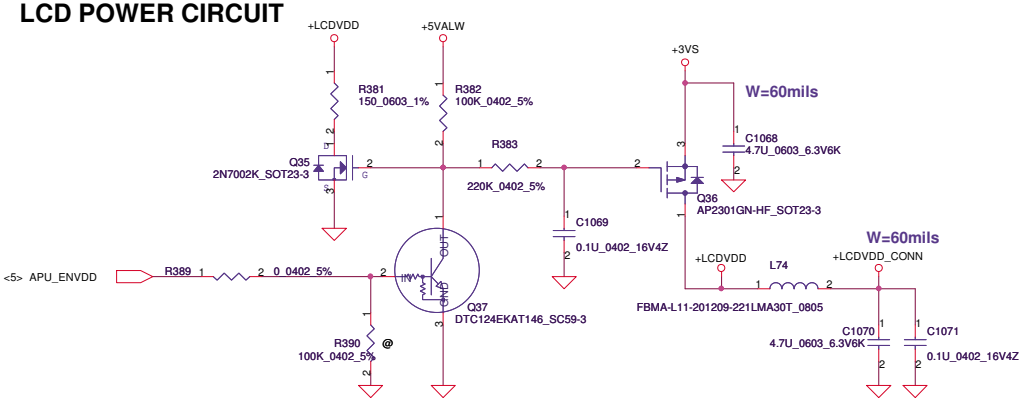


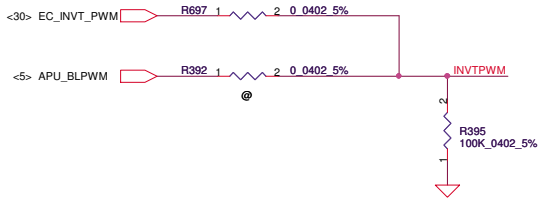


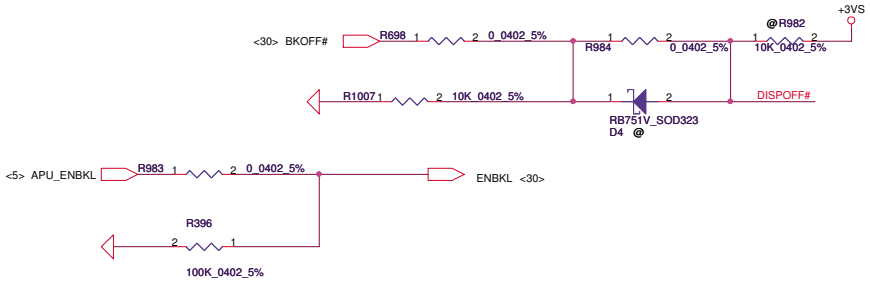


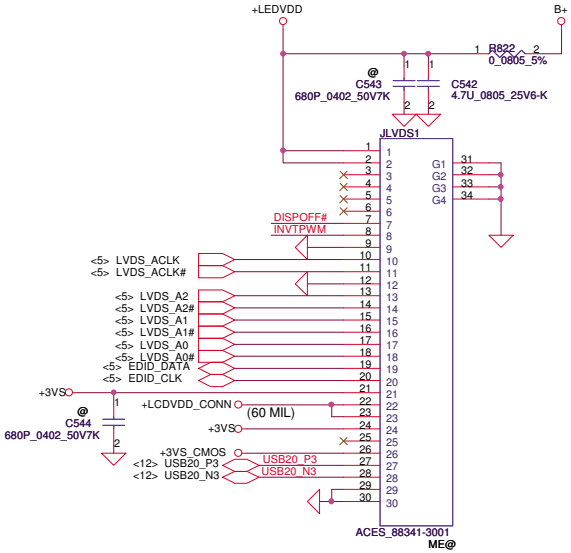


## CMOS Camera

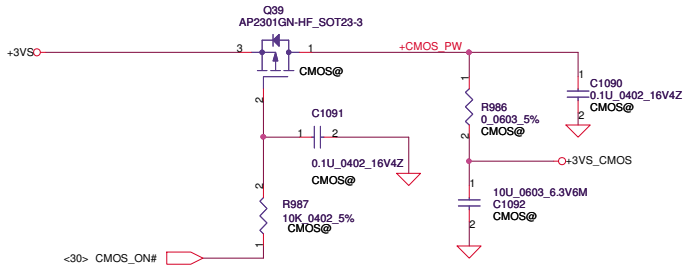


| Security Classification | Compal Secret Data | | |
|---|---|---|---|
| Issued Date | 2011/10/12 | Deciphered Date | 2013/10/12 |

THIS SHEET OF ENGINEERING DRAWING IS THE PROPRIETARY PROPERTY OF COMPAL ELECTRONICS, INC. AND CONTAINS CONFIDENTIAL AND TRADE SECRET INFORMATION. THIS SHEET MAY NOT BE TRANSFERED FROM THE CUSTODY OF THE COMPETENT DIVISION OF R&D DEPARTMENT EXCEPT AS AUTHORIZED BY COMPAL ELECTRONICS, INC. NEITHER THIS SHEET NOR THE INFORMATION IT CONTAINS MAY BE USED BY OR DISCLOSED TO ANY THIRD PARTY WITHOUT PRIOR WRITTEN CONSENT OF COMPAL ELECTRONICS, INC.

**Compal Electronics, Inc.**

Title: LVDS/CAMERA

Size: B | Document Number: LA8681P | Rev: 0.1

Date: Wednesday, November 30, 2011 | Sheet 22 of 48

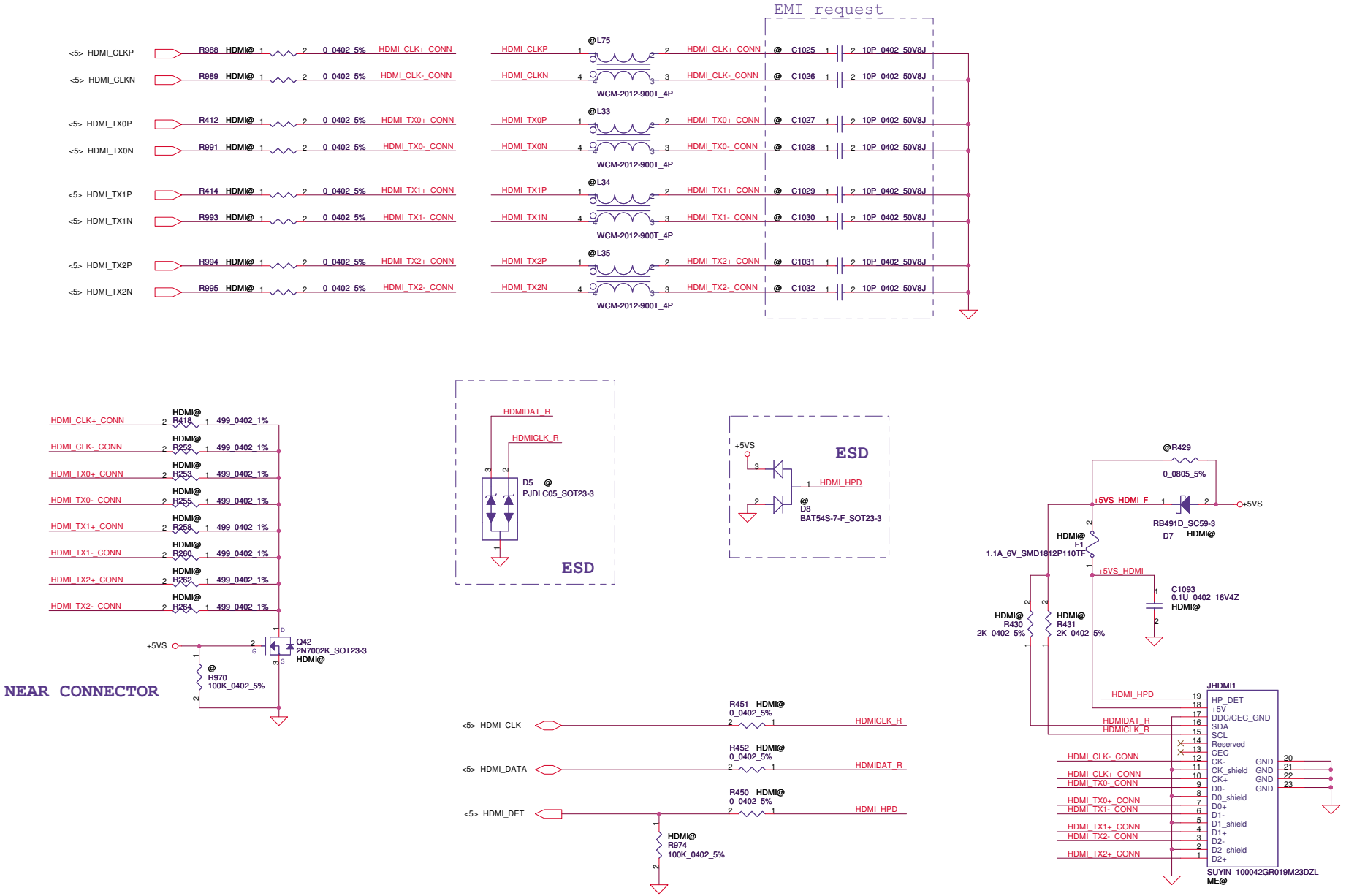


| Security Classification | Compal Secret Data | | |
|---|---|---|---|
| Issued Date | 2011/10/12 | Deciphered Date | 2013/10/12 |

THIS SHEET OF ENGINEERING DRAWING IS THE PROPRIETARY PROPERTY OF COMPAL ELECTRONICS, INC. AND CONTAINS CONFIDENTIAL AND TRADE SECRET INFORMATION. THIS SHEET MAY NOT BE TRANSFERED FROM THE CUSTODY OF THE COMPETENT DIVISION OF R&D DEPARTMENT EXCEPT AS AUTHORIZED BY COMPAL ELECTRONICS, INC. NEITHER THIS SHEET NOR THE INFORMATION IT CONTAINS MAY BE USED BY OR DISCLOSED TO ANY THIRD PARTY WITHOUT PRIOR WRITTEN CONSENT OF COMPAL ELECTRONICS, INC.

Compal Electronics, Inc.

Title: HDMI Connector

Size: Custom | Document Number: LA8681P | Rev: 0.1

Date: Wednesday, November 30, 2011 | Sheet 23 of 48

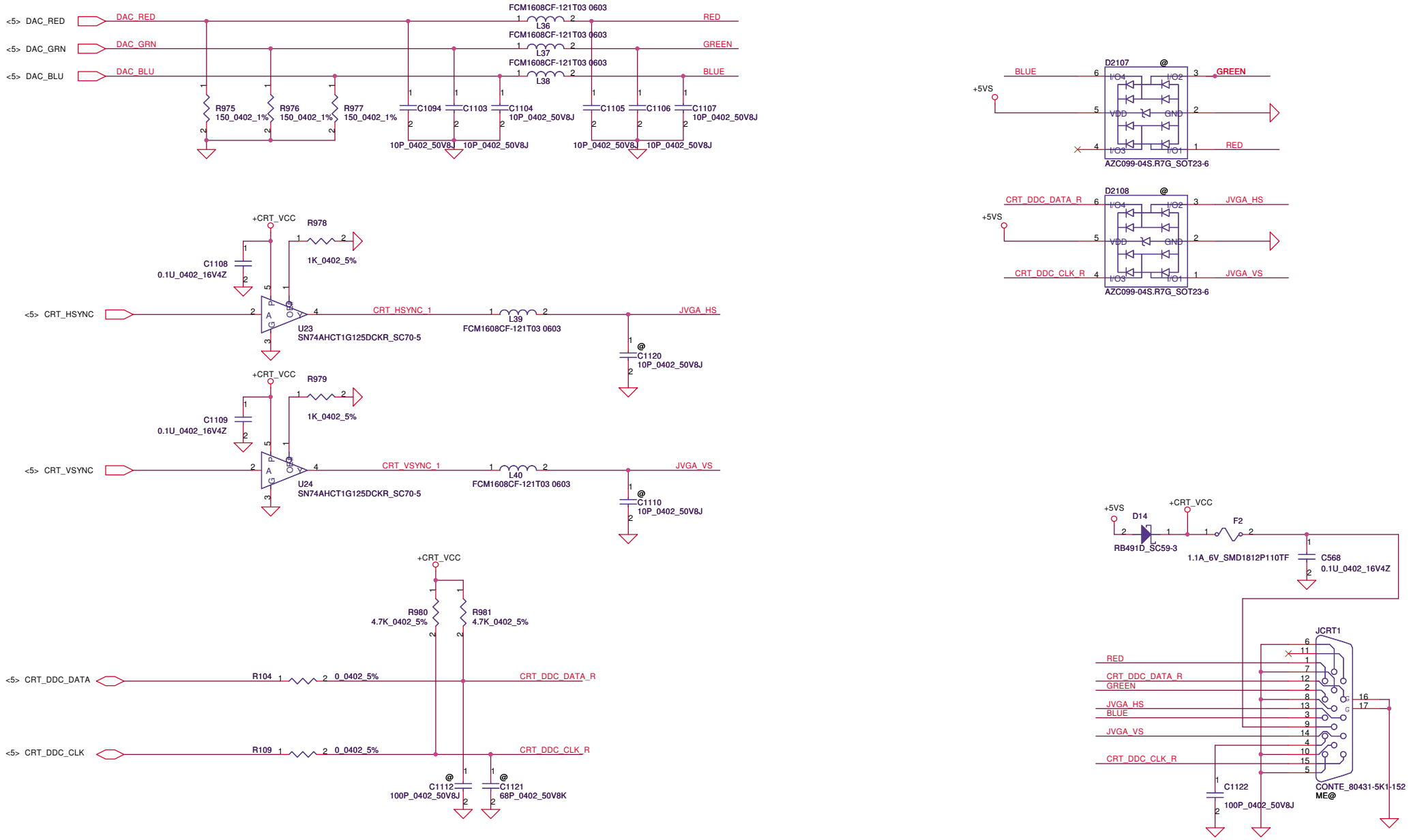


| Security Classification | Compal Secret Data | | |
|---|---|---|---|
| Issued Date | 2011/10/12 | Deciphered Date | 2013/10/12 |

THIS SHEET OF ENGINEERING DRAWING IS THE PROPRIETARY PROPERTY OF COMPAL ELECTRONICS, INC. AND CONTAINS CONFIDENTIAL AND TRADE SECRET INFORMATION. THIS SHEET MAY NOT BE TRANSFERED FROM THE CUSTODY OF THE COMPETENT DIVISION OF R&D DEPARTMENT EXCEPT AS AUTHORIZED BY COMPAL ELECTRONICS, INC. NEITHER THIS SHEET NOR THE INFORMATION IT CONTAINS MAY BE USED BY OR DISCLOSED TO ANY THIRD PARTY WITHOUT PRIOR WRITTEN CONSENT OF COMPAL ELECTRONICS, INC.

**Compal Electronics, Inc.**

Title: CRT Connector

Size: Custom | Document Number: LA8681P | Rev: 0.1

Date: Wednesday, November 30, 2011 | Sheet 24 of 48

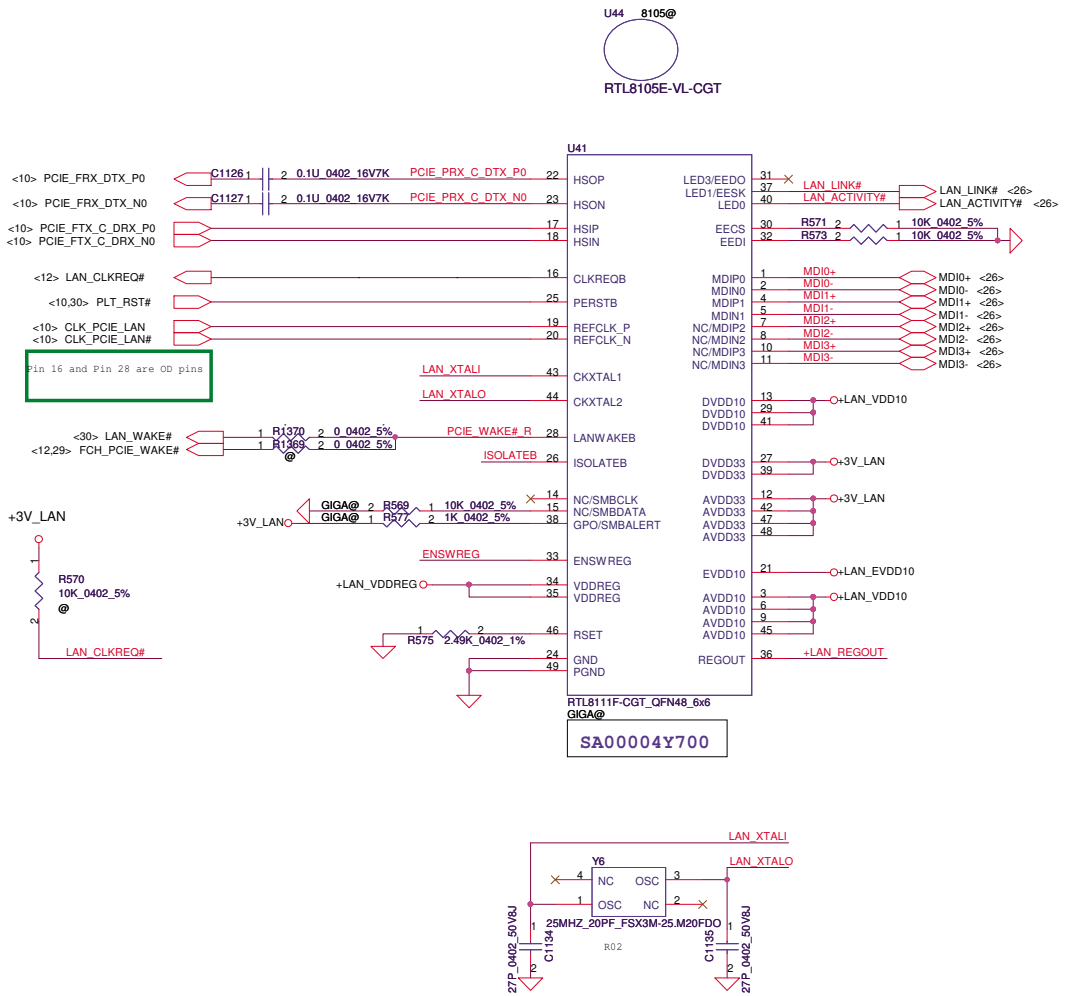





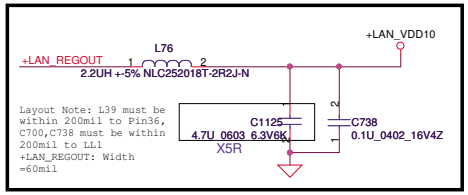


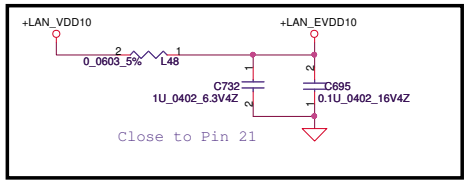


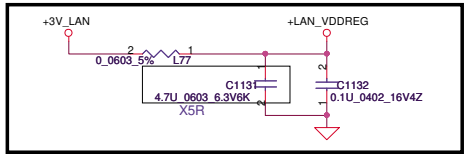


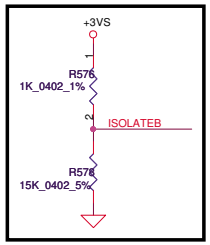


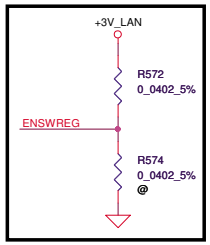


H: Enable internal Regular
L: Disable

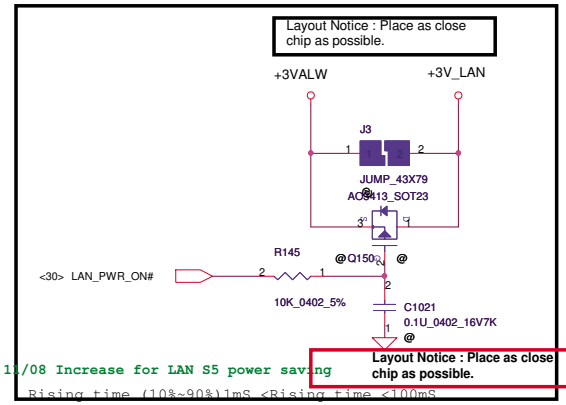


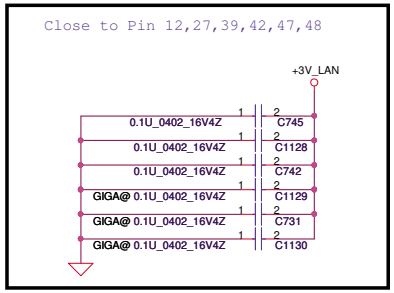


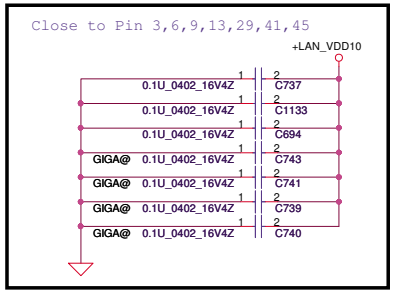


| Security Classification | Compal Secret Data | | |
|---|---|---|---|
| Issued Date | 2011/06/15 | Deciphered Date | 2012/07/11 |

THIS SHEET OF ENGINEERING DRAWING IS THE PROPRIETARY PROPERTY OF COMPAL ELECTRONICS, INC. AND CONTAINS CONFIDENTIAL AND TRADE SECRET INFORMATION. THIS SHEET MAY NOT BE TRANSFERED FROM THE CUSTODY OF THE COMPETENT DIVISION OF R&D DEPARTMENT EXCEPT AS AUTHORIZED BY COMPAL ELECTRONICS, INC. NEITHER THIS SHEET NOR THE INFORMATION IT CONTAINS MAY BE USED BY OR DISCLOSED TO ANY THIRD PARTY WITHOUT PRIOR WRITTEN CONSENT OF COMPAL ELECTRONICS, INC.

**Compal Electronics, Inc.**

Title: LAN-RTL8111F/8105E

Size: Custom | Document Number: LA-7984P | Rev: 0.1

Date: Wednesday, November 30, 2011 | Sheet 25 of 48

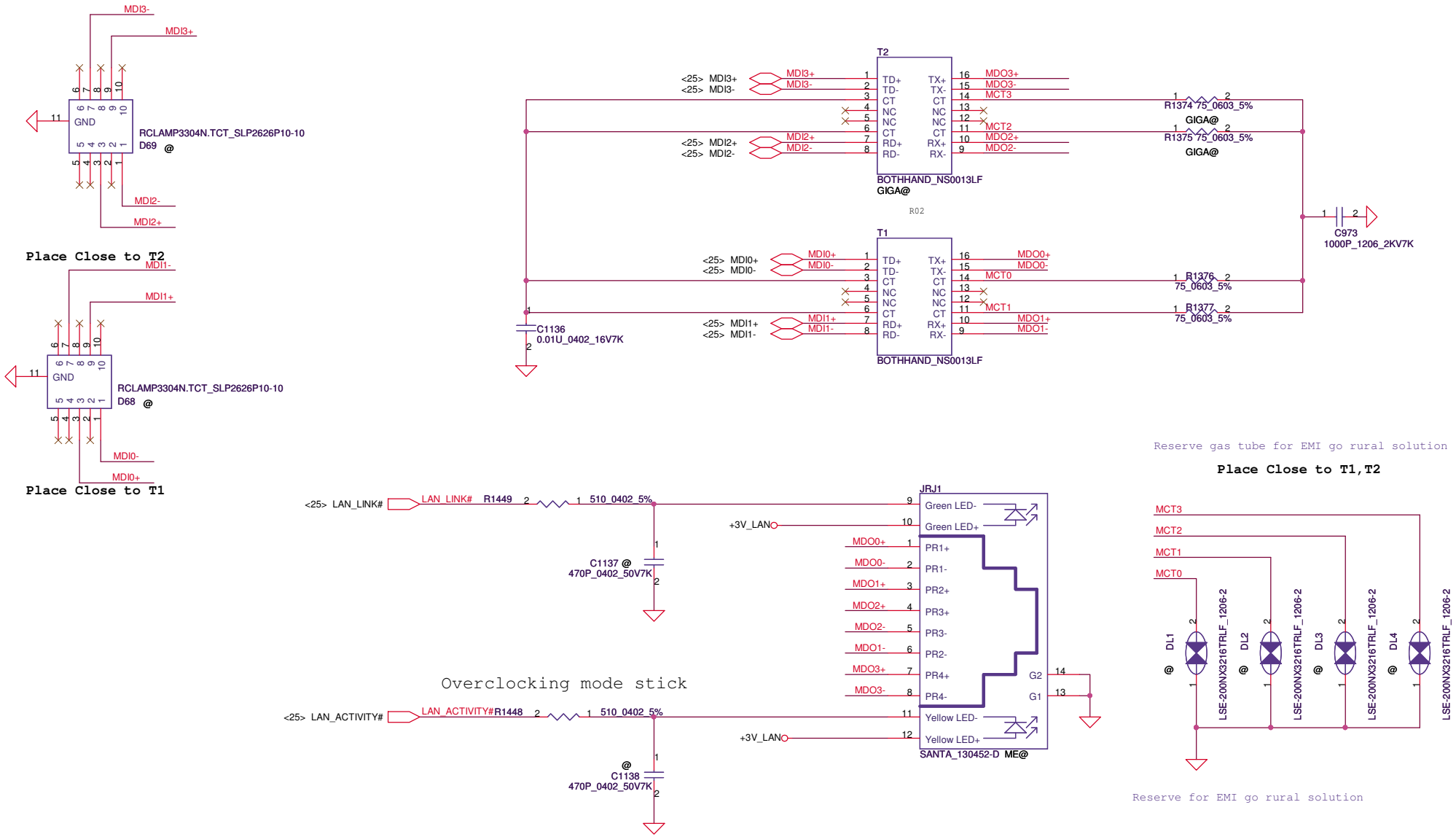


| Security Classification | Compal Secret Data | | |
|---|---|---|---|
| Issued Date | 2011/06/15 | Deciphered Date | 2012/07/11 |

THIS SHEET OF ENGINEERING DRAWING IS THE PROPRIETARY PROPERTY OF COMPAL ELECTRONICS, INC. AND CONTAINS CONFIDENTIAL AND TRADE SECRET INFORMATION. THIS SHEET MAY NOT BE TRANSFERED FROM THE CUSTODY OF THE COMPETENT DIVISION OF R&D DEPARTMENT EXCEPT AS AUTHORIZED BY COMPAL ELECTRONICS, INC. NEITHER THIS SHEET NOR THE INFORMATION IT CONTAINS MAY BE USED BY OR DISCLOSED TO ANY THIRD PARTY WITHOUT PRIOR WRITTEN CONSENT OF COMPAL ELECTRONICS, INC.

**Compal Electronics, Inc.**

Title: LAN_Transformer

Size: B | Document Number: LA-7984P | Rev: 0.1

Date: Wednesday, November 30, 2011 | Sheet 26 of 48

CX20671
High Definition Audio Codec SoC
With Integrated Class-D Stereo
Amplifier.
An integrated 5 V to 3.3 V Low-dropout
voltage regulator (LDO).
An integrated 3.3 V to 1.8V Low-dropout
voltage regulator (LDO).

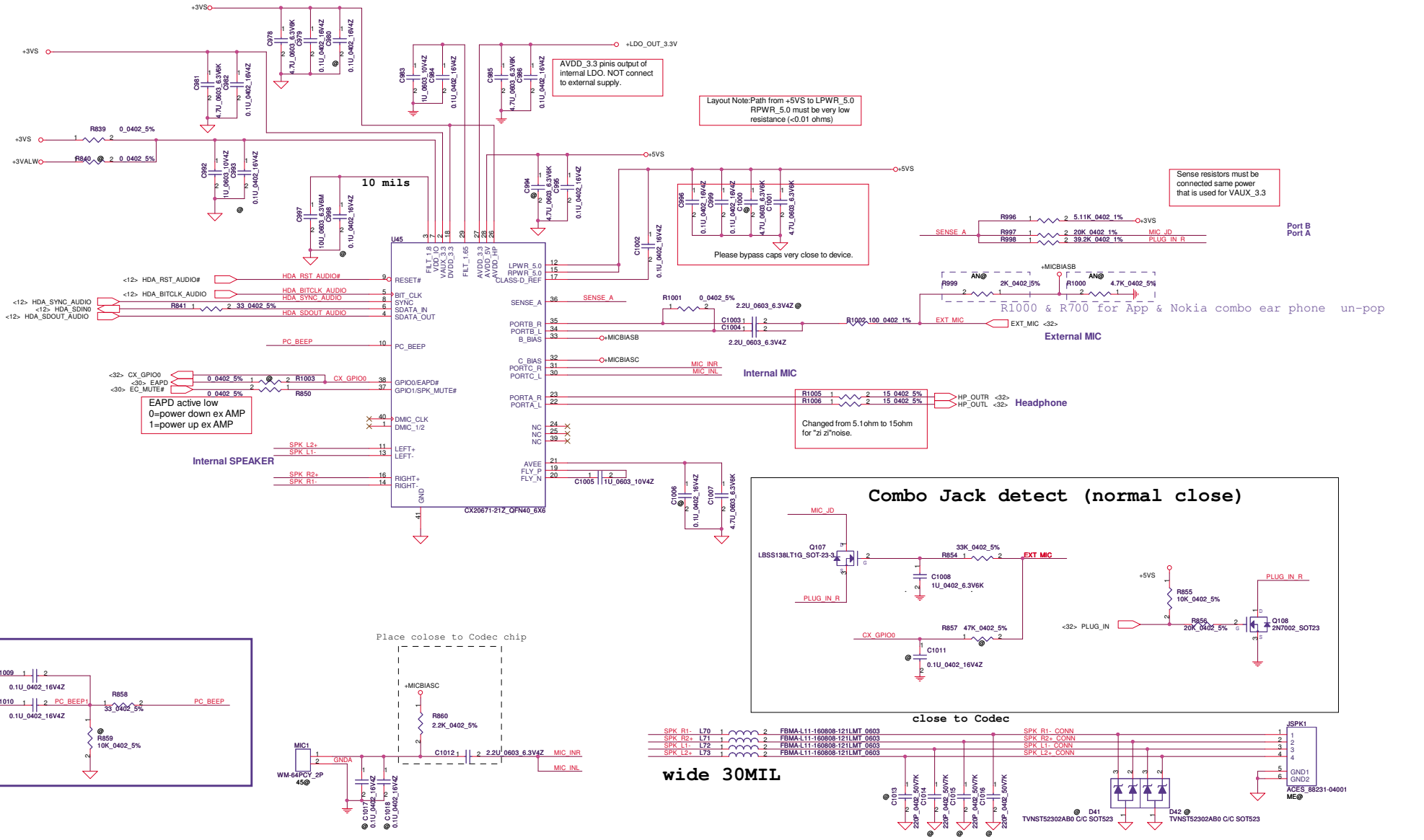


| Security Classification | Compal Secret Data | | |
|---|---|---|---|
| Issued Date | 2011/10/12 | Deciphered Date | 2013/10/12 |

THIS SHEET OF ENGINEERING DRAWING IS THE PROPRIETARY PROPERTY OF COMPAL ELECTRONICS, INC. AND CONTAINS CONFIDENTIAL AND TRADE SECRET INFORMATION. THIS SHEET MAY NOT BE TRANSFERED FROM THE CUSTODY OF THE COMPETENT DIVISION OF R&D DEPARTMENT EXCEPT AS AUTHORIZED BY COMPAL ELECTRONICS, INC. NEITHER THIS SHEET NOR THE INFORMATION IT CONTAINS MAY BE USED BY OR DISCLOSED TO ANY THIRD PARTY WITHOUT PRIOR WRITTEN CONSENT OF COMPAL ELECTRONICS, INC.

**Compal Electronics, Inc.**

Title: CX20671 Codec

Size: Custom | Document Number: LA8681P | Rev: 0.1

Date: Wednesday, November 30, 2011 | Sheet 27 of 48

# HDD CONN

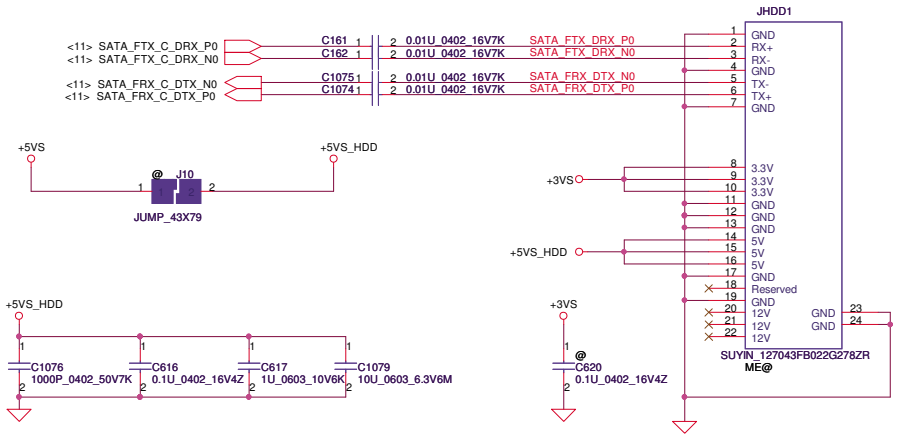


# BT MODULE CONN

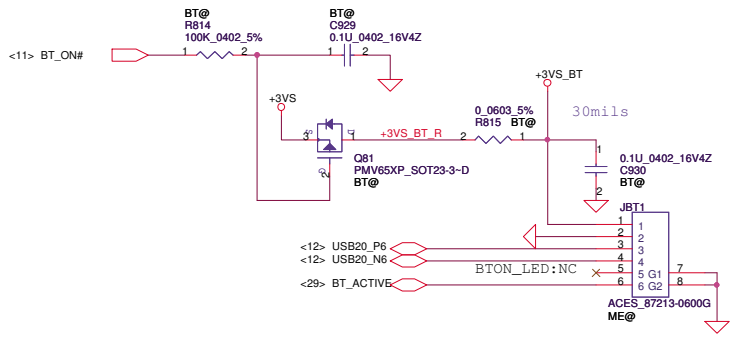


# ODD CONN 15"

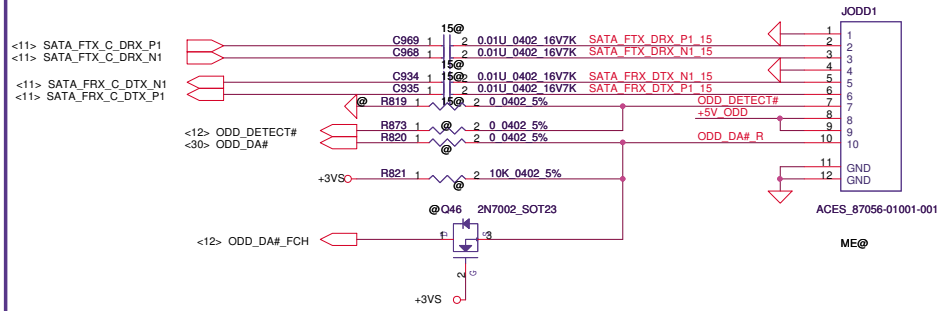


short J12, no zero power ODD function

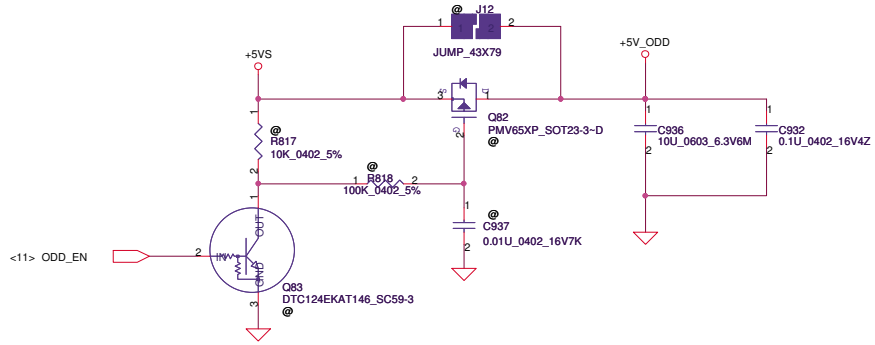


# ODD CONN 14"

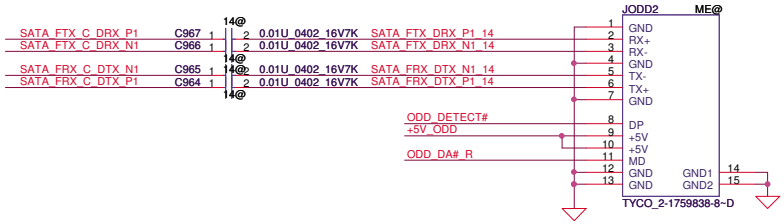


| Security Classification | Compal Secret Data | | |
|---|---|---|---|
| Issued Date | 2011/10/12 | Deciphered Date | 2013/10/12 |

THIS SHEET OF ENGINEERING DRAWING IS THE PROPRIETARY PROPERTY OF COMPAL ELECTRONICS, INC. AND CONTAINS CONFIDENTIAL AND TRADE SECRET INFORMATION. THIS SHEET MAY NOT BE TRANSFERED FROM THE CUSTODY OF THE COMPETENT DIVISION OF R&D DEPARTMENT EXCEPT AS AUTHORIZED BY COMPAL ELECTRONICS, INC. NEITHER THIS SHEET NOR THE INFORMATION IT CONTAINS MAY BE USED BY OR DISCLOSED TO ANY THIRD PARTY WITHOUT PRIOR WRITTEN CONSENT OF COMPAL ELECTRONICS, INC.

**Compal Electronics, Inc.**

Title: HDD/ODD/BT

Size: B | Document Number: LA8681P | Rev: 0.1

Date: Wednesday, November 30, 2011 | Sheet 28 of 48

# Mini-Express Card for WLAN/WiMAX(Half)

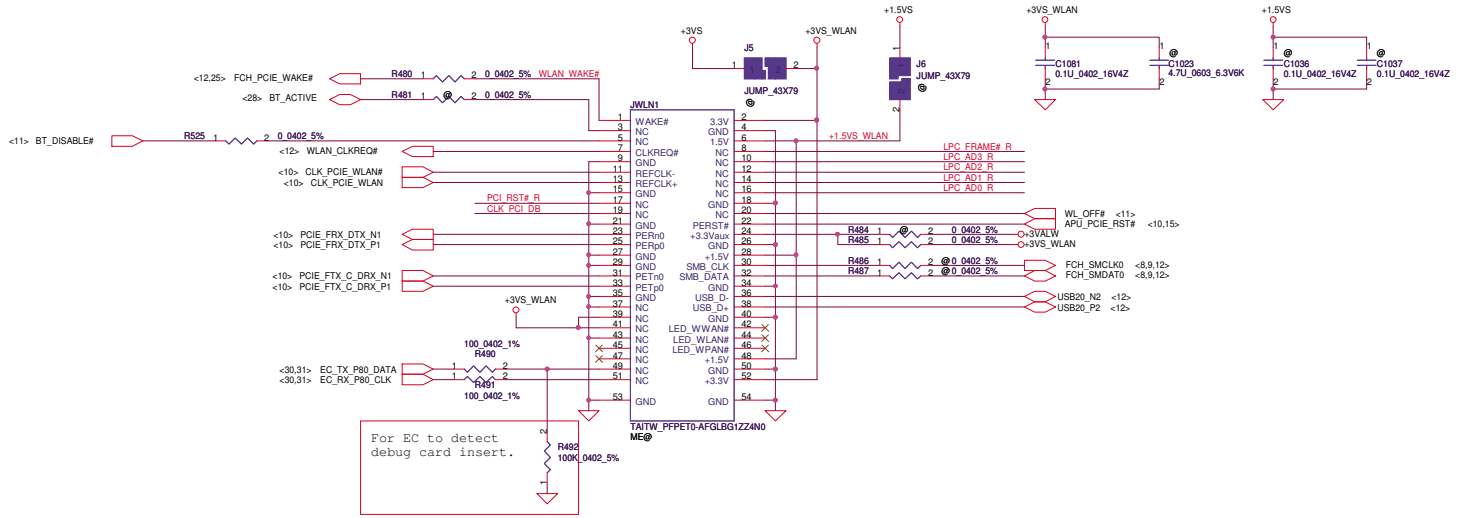


**Reserve for SW mini-pcie debug card.**
**Series resistors closed to KBC side.**

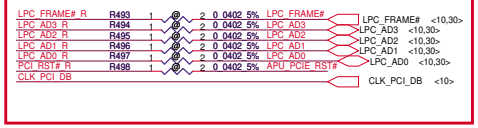


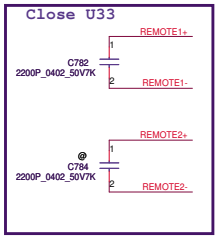


**Fintek thermal sensor placed near by VRAM**

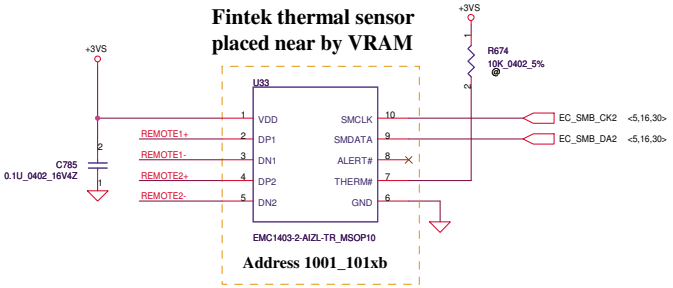


**Address 1001_101xb**

Change from SA000029210 to SA000046C00 for main source

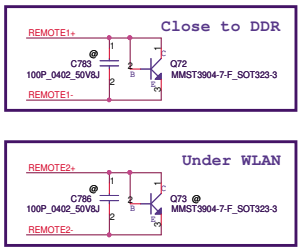


REMOTE1,2+/-:
Trace width/space:10/10 mil
Trace length:<8"

| Security Classification | Compal Secret Data | | | Compal Electronics, Inc. |
|---|---|---|---|---|
| Issued Date | 2011/10/12 | Deciphered Date | 2013/10/12 | Title: Mini PCIE/Thermal IC |
| | | | | Size: Document Number: LA8681P Rev: 0.1 |
| | | | | Date: Wednesday, November 30, 2011 Sheet 29 of 48 |

THIS SHEET OF ENGINEERING DRAWING IS THE PROPRIETARY PROPERTY OF COMPAL ELECTRONICS, INC. AND CONTAINS CONFIDENTIAL AND TRADE SECRET INFORMATION. THIS SHEET MAY NOT BE TRANSFERED FROM THE CUSTODY OF THE COMPETENT DIVISION OF R&D DEPARTMENT EXCEPT AS AUTHORIZED BY COMPAL ELECTRONICS, INC. NEITHER THIS SHEET NOR THE INFORMATION IT CONTAINS MAY BE USED BY OR DISCLOSED TO ANY THIRD PARTY WITHOUT PRIOR WRITTEN CONSENT OF COMPAL ELECTRONICS, INC.

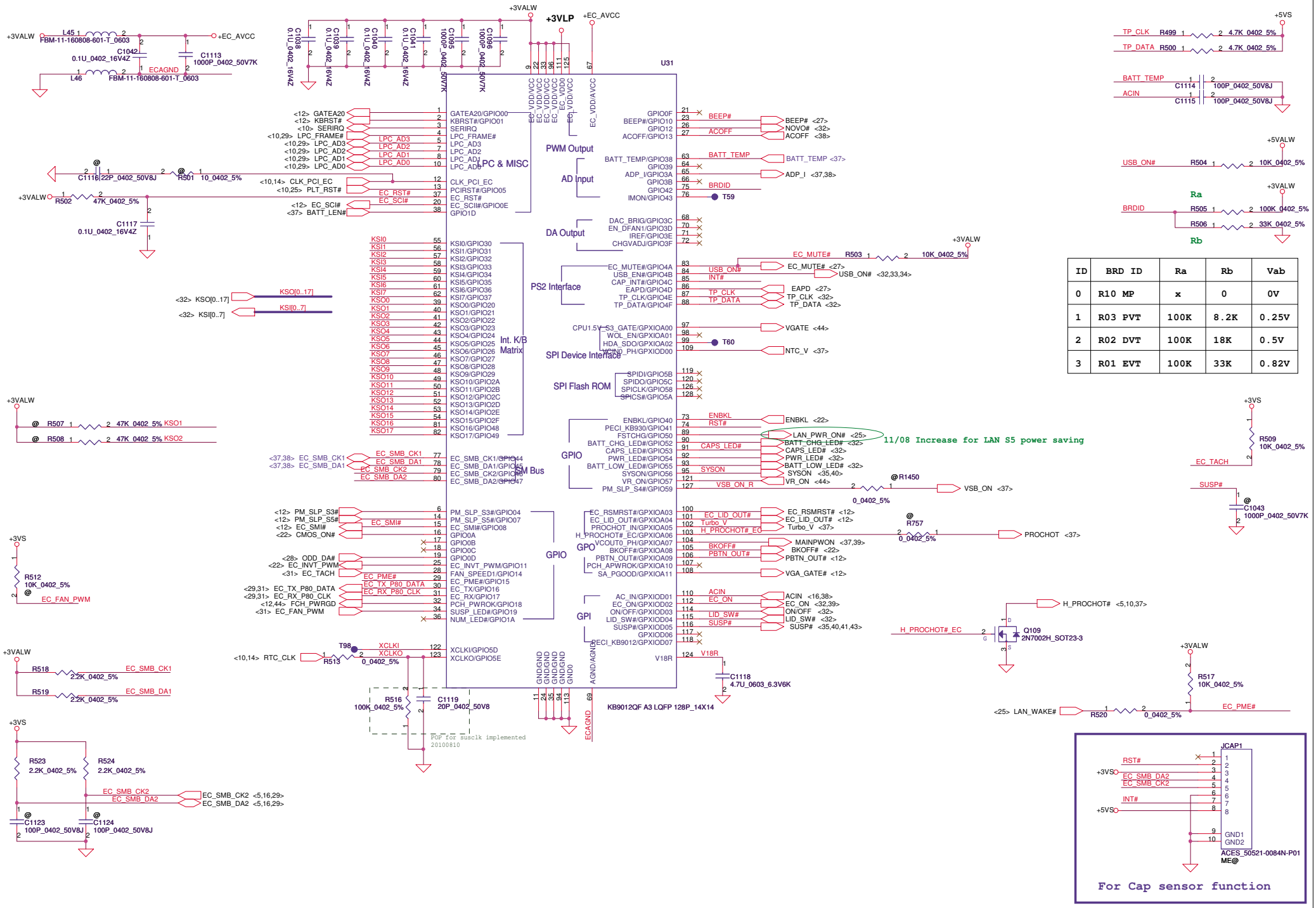


| ID | BRD ID | Ra | Rb | Vab |
|---|---|---|---|---|
| 0 | R10 MP | x | 0 | 0V |
| 1 | R03 PVT | 100K | 8.2K | 0.25V |
| 2 | R02 DVT | 100K | 18K | 0.5V |
| 3 | R01 EVT | 100K | 33K | 0.82V |

| Security Classification | Compal Secret Data | | |
|---|---|---|---|
| Issued Date | 2011/10/12 | Deciphered Date | 2013/10/12 |

THIS SHEET OF ENGINEERING DRAWING IS THE PROPRIETARY PROPERTY OF COMPAL ELECTRONICS, INC. AND CONTAINS CONFIDENTIAL AND TRADE SECRET INFORMATION. THIS SHEET MAY NOT BE TRANSFERED FROM THE CUSTODY OF THE COMPETENT DIVISION OF R&D DEPARTMENT EXCEPT AS AUTHORIZED BY COMPAL ELECTRONICS, INC. NEITHER THIS SHEET NOR THE INFORMATION IT CONTAINS MAY BE USED BY OR DISCLOSED TO ANY THIRD PARTY WITHOUT PRIOR WRITTEN CONSENT OF COMPAL ELECTRONICS, INC.

**Compal Electronics, Inc.**

Title: KB9012/Cap sensor

Size: Custom | Document Number: LA8681P | Rev: 0.1

Date: Wednesday, November 30, 2011 | Sheet 30 of 48

## FAN CONN

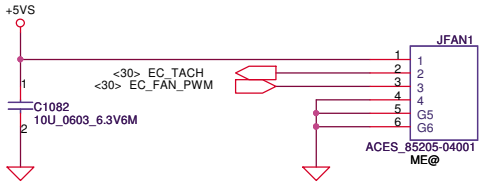


## EC DEBUG PORT

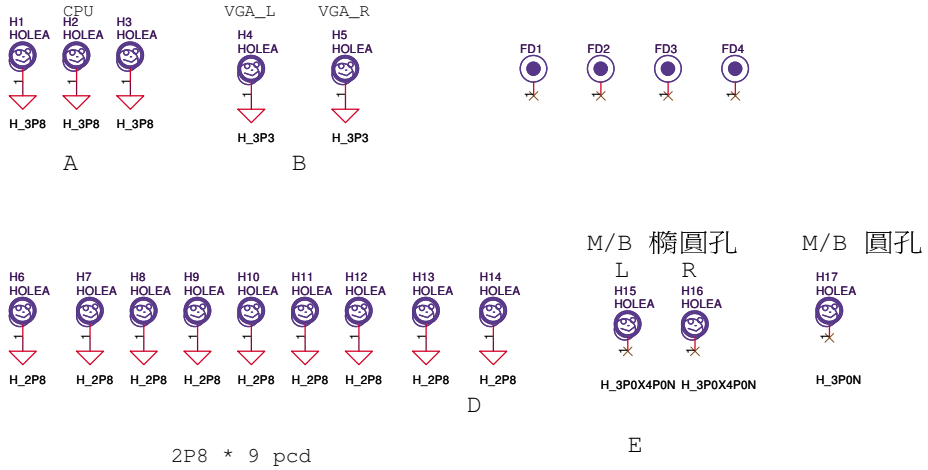


| Security Classification | Compal Secret Data | | |
|---|---|---|---|
| Issued Date | 2011/10/12 | Deciphered Date | 2013/10/12 |

THIS SHEET OF ENGINEERING DRAWING IS THE PROPRIETARY PROPERTY OF COMPAL ELECTRONICS, INC. AND CONTAINS CONFIDENTIAL AND TRADE SECRET INFORMATION. THIS SHEET MAY NOT BE TRANSFERED FROM THE CUSTODY OF THE COMPETENT DIVISION OF R&D DEPARTMENT EXCEPT AS AUTHORIZED BY COMPAL ELECTRONICS, INC. NEITHER THIS SHEET NOR THE INFORMATION IT CONTAINS MAY BE USED BY OR DISCLOSED TO ANY THIRD PARTY WITHOUT PRIOR WRITTEN CONSENT OF COMPAL ELECTRONICS, INC.

**Compal Electronics, Inc.**

Title: FAN/SCREW/EC Debug

Size: B | Document Number: LA8681P | Rev: 0.1

Date: Wednesday, November 30, 2011 | Sheet 31 of 48

## ON/OFF switch

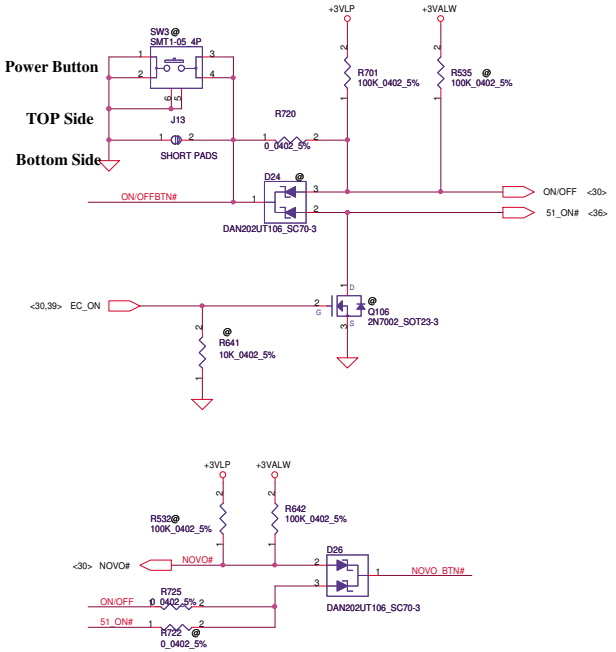


## INT_KBD Conn.

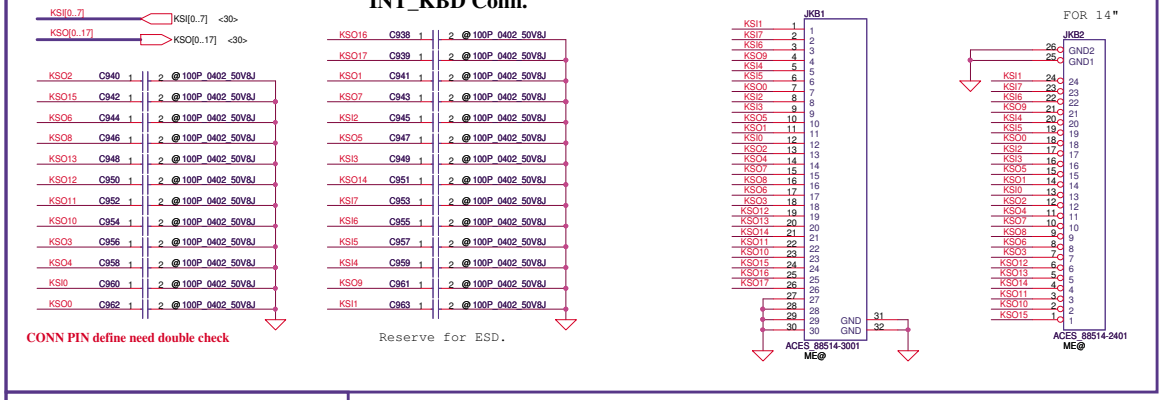


## Power Button Board Conn. 8pin

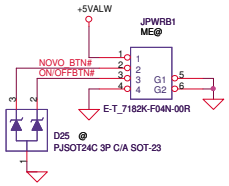


## FOR 14"

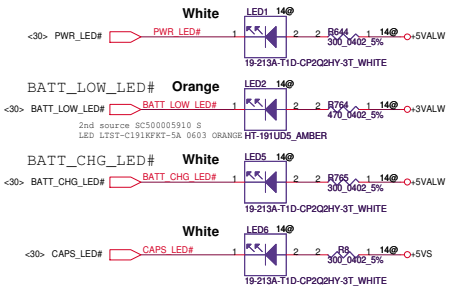


## Lid Switch

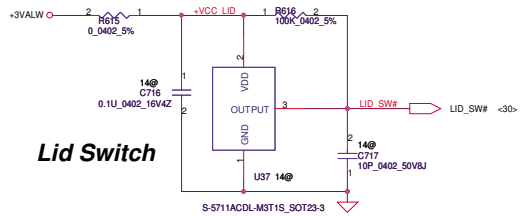


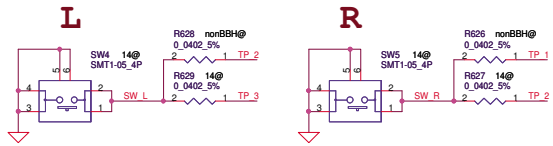


## IO board USB port

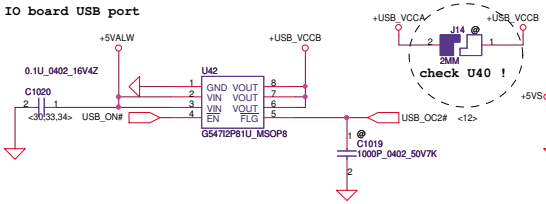


## EMI request

## Card Reader/Audio Jack SB CONN

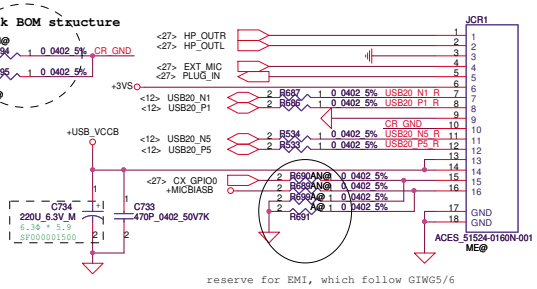


## FOR 15"

### LED B/D Conn

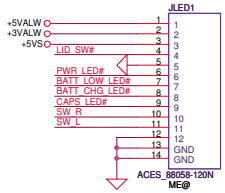


## To TP/B Conn.

| pin | 6 | 5 | 4 | 3 | 2 | 1 |
|---|---|---|---|---|---|---|
| 14 | VDD | CLK | DAT | L | R | GND |
| 15 | VDD | CLK | DAT | GND | L | R |
| BB-H | VDD | CLK | DAT | GND | NC | NC |
| BB-L | VDD | CLK | DAT | GND | L | R |

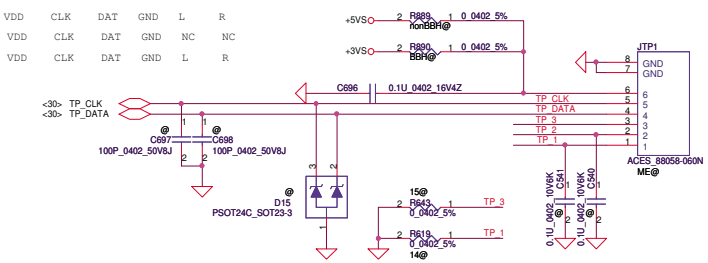


| Security Classification | Compal Secret Data | | |
|---|---|---|---|
| Issued Date | 2011/10/12 | Deciphered Date | 2013/10/12 |

THIS SHEET OF ENGINEERING DRAWING IS THE PROPRIETARY PROPERTY OF COMPAL ELECTRONICS, INC. AND CONTAINS CONFIDENTIAL AND TRADE SECRET INFORMATION. THIS SHEET MAY NOT BE TRANSFERED FROM THE CUSTODY OF THE COMPETENT DIVISION OF R&D DEPARTMENT EXCEPT AS AUTHORIZED BY COMPAL ELECTRONICS, INC. NEITHER THIS SHEET NOR THE INFORMATION IT CONTAINS MAY BE USED BY OR DISCLOSED TO ANY THIRD PARTY WITHOUT PRIOR WRITTEN CONSENT OF COMPAL ELECTRONICS, INC.

Compal Electronics, Inc.

Title: KBD/PWR/CR/LED/TP Conn.

Size: C | Document Number: LA8681P | Rev: 0.1

Date: Wednesday, November 30, 2011 | Sheet 32 of 48

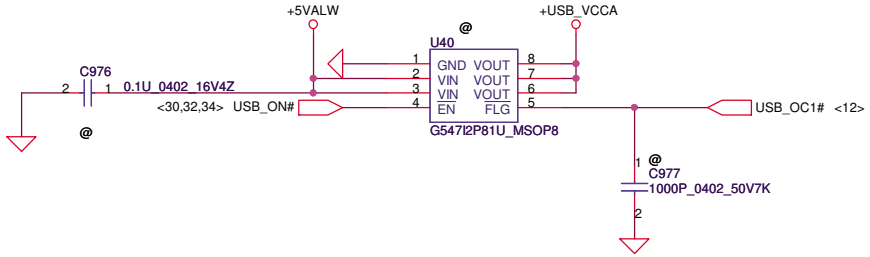


# Right Ext.USB FFC Conn.

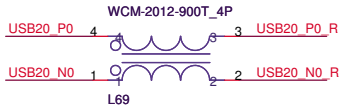


Update to SM070001S00 for EMI request

W=80mils

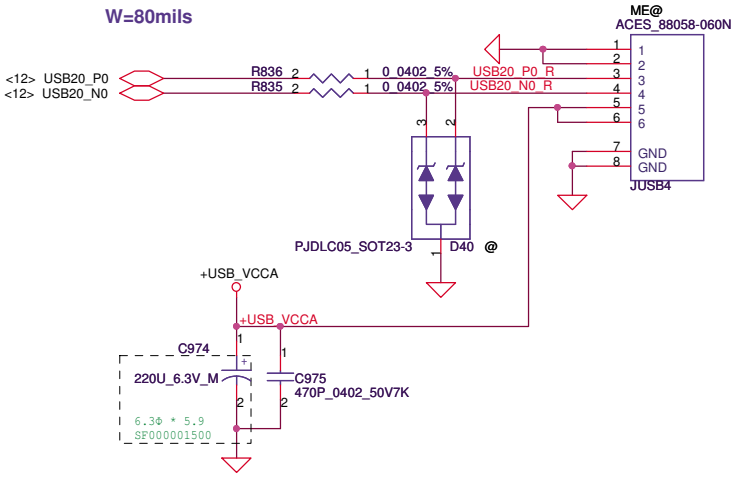


| Security Classification | Compal Secret Data | | |
|---|---|---|---|
| Issued Date | 2011/10/12 | Deciphered Date | 2013/10/12 |

THIS SHEET OF ENGINEERING DRAWING IS THE PROPRIETARY PROPERTY OF COMPAL ELECTRONICS, INC. AND CONTAINS CONFIDENTIAL AND TRADE SECRET INFORMATION. THIS SHEET MAY NOT BE TRANSFERED FROM THE CUSTODY OF THE COMPETENT DIVISION OF R&D DEPARTMENT EXCEPT AS AUTHORIZED BY COMPAL ELECTRONICS, INC. NEITHER THIS SHEET NOR THE INFORMATION IT CONTAINS MAY BE USED BY OR DISCLOSED TO ANY THIRD PARTY WITHOUT PRIOR WRITTEN CONSENT OF COMPAL ELECTRONICS, INC.

**Compal Electronics, Inc.**

Title: USB cable port

Size: B | Document Number: LA8681P | Rev: 0.1

Date: Wednesday, November 30, 2011 | Sheet 33 of 48

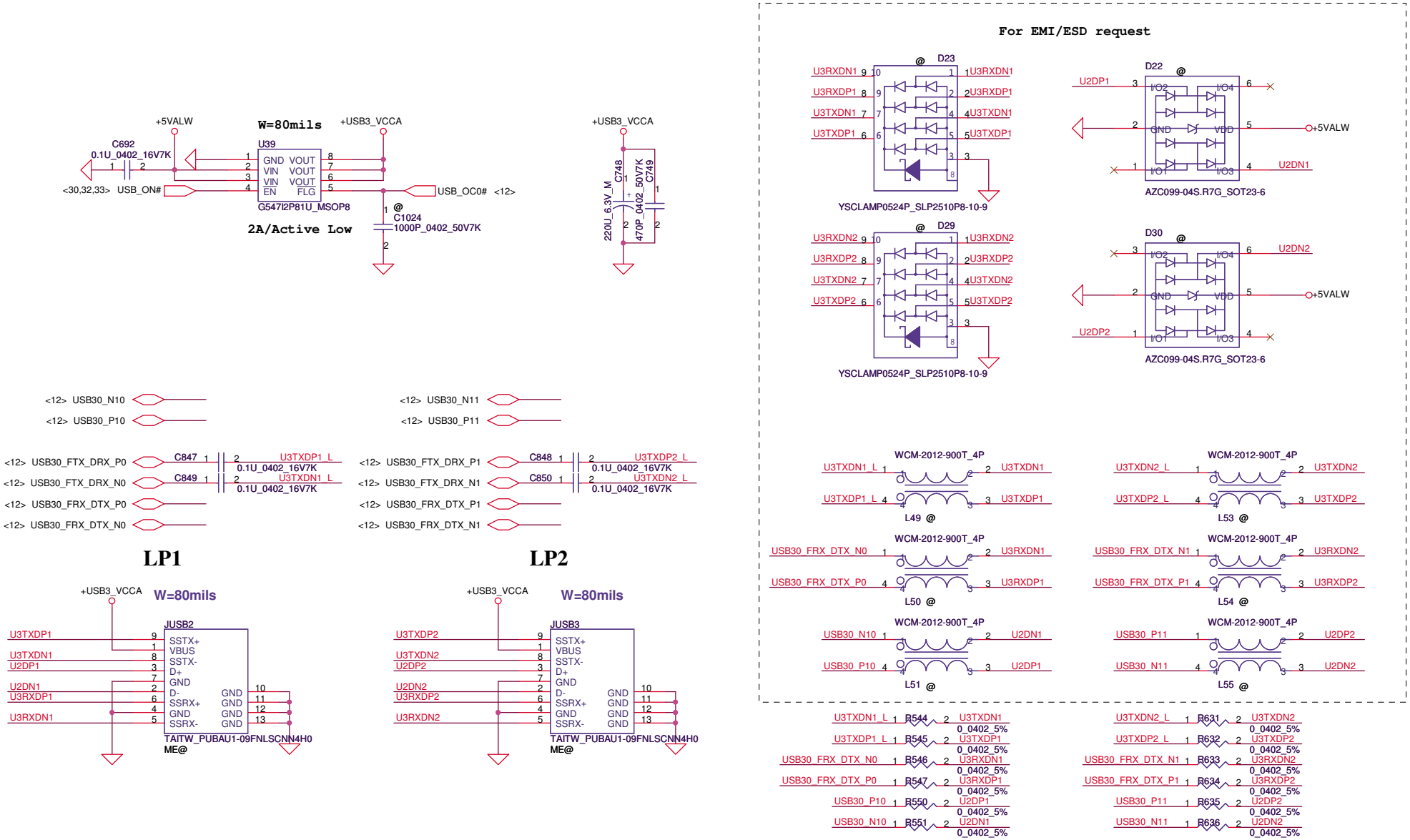


| Security Classification | Compal Secret Data | | |
|---|---|---|---|
| Issued Date | 2011/10/12 | Deciphered Date | 2013/10/12 |

THIS SHEET OF ENGINEERING DRAWING IS THE PROPRIETARY PROPERTY OF COMPAL ELECTRONICS, INC. AND CONTAINS CONFIDENTIAL AND TRADE SECRET INFORMATION. THIS SHEET MAY NOT BE TRANSFERED FROM THE CUSTODY OF THE COMPETENT DIVISION OF R&D DEPARTMENT EXCEPT AS AUTHORIZED BY COMPAL ELECTRONICS, INC. NEITHER THIS SHEET NOR THE INFORMATION IT CONTAINS MAY BE USED BY OR DISCLOSED TO ANY THIRD PARTY WITHOUT PRIOR WRITTEN CONSENT OF COMPAL ELECTRONICS, INC.

**Compal Electronics, Inc.**

Title: Left USB3.0

Size: B | Document Number: LA8681P | Rev: 0.1

Date: Wednesday, November 30, 2011 | Sheet 34 of 48

## +5VALW TO +5VS

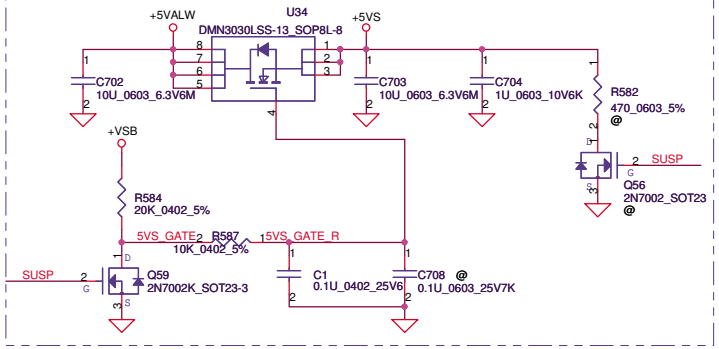


## +3VALW TO +3VS

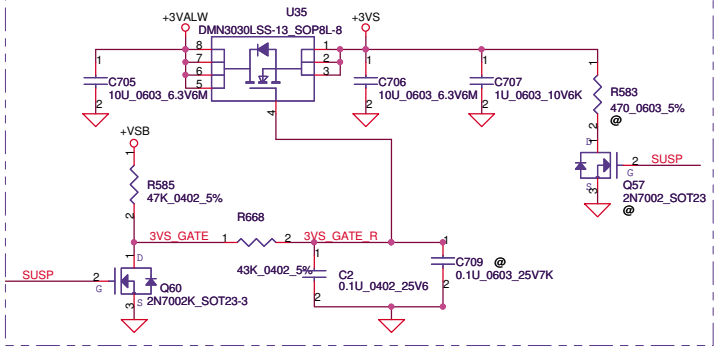


## +1.5V to +1.5VS

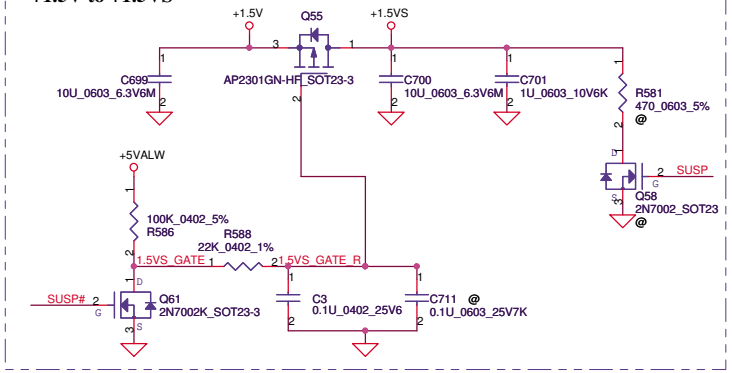


## +1.1VALW to +1.1VS

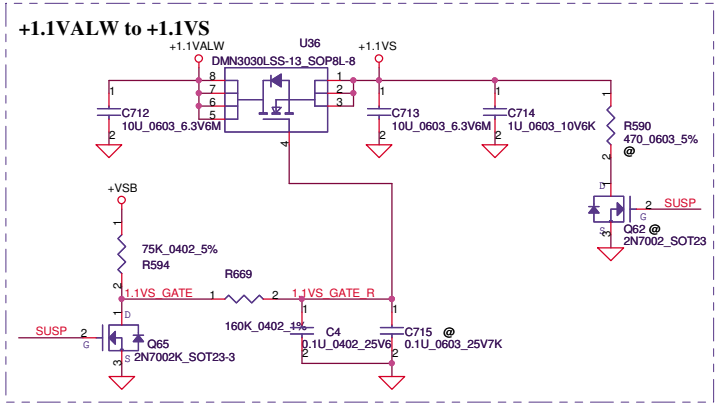


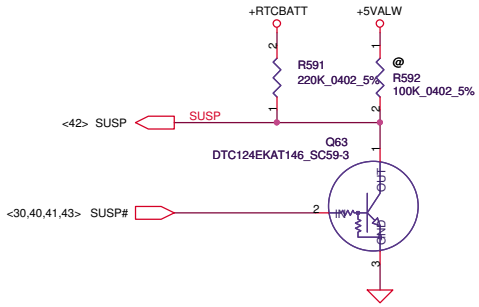


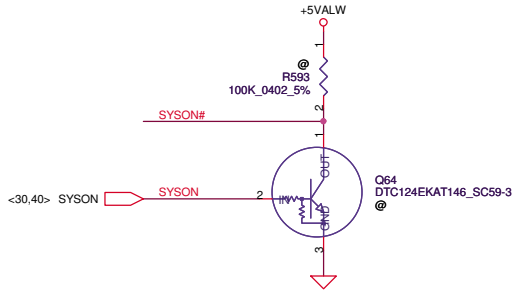


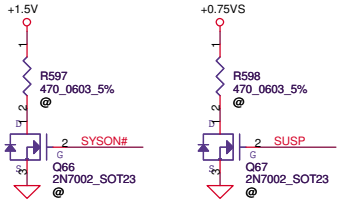


| Security Classification | Compal Secret Data | | |
|---|---|---|---|
| Issued Date | 2011/10/12 | Deciphered Date | 2013/10/12 |

THIS SHEET OF ENGINEERING DRAWING IS THE PROPRIETARY PROPERTY OF COMPAL ELECTRONICS, INC. AND CONTAINS CONFIDENTIAL AND TRADE SECRET INFORMATION. THIS SHEET MAY NOT BE TRANSFERED FROM THE CUSTODY OF THE COMPETENT DIVISION OF R&D DEPARTMENT EXCEPT AS AUTHORIZED BY COMPAL ELECTRONICS, INC. NEITHER THIS SHEET NOR THE INFORMATION IT CONTAINS MAY BE USED BY OR DISCLOSED TO ANY THIRD PARTY WITHOUT PRIOR WRITTEN CONSENT OF COMPAL ELECTRONICS, INC.

**Compal Electronics, Inc.**

Title: DC Interface

Size: Custom | Document Number: LA8681P | Rev: 0.1

Date: Wednesday, November 30, 2011 | Sheet 35 of 48

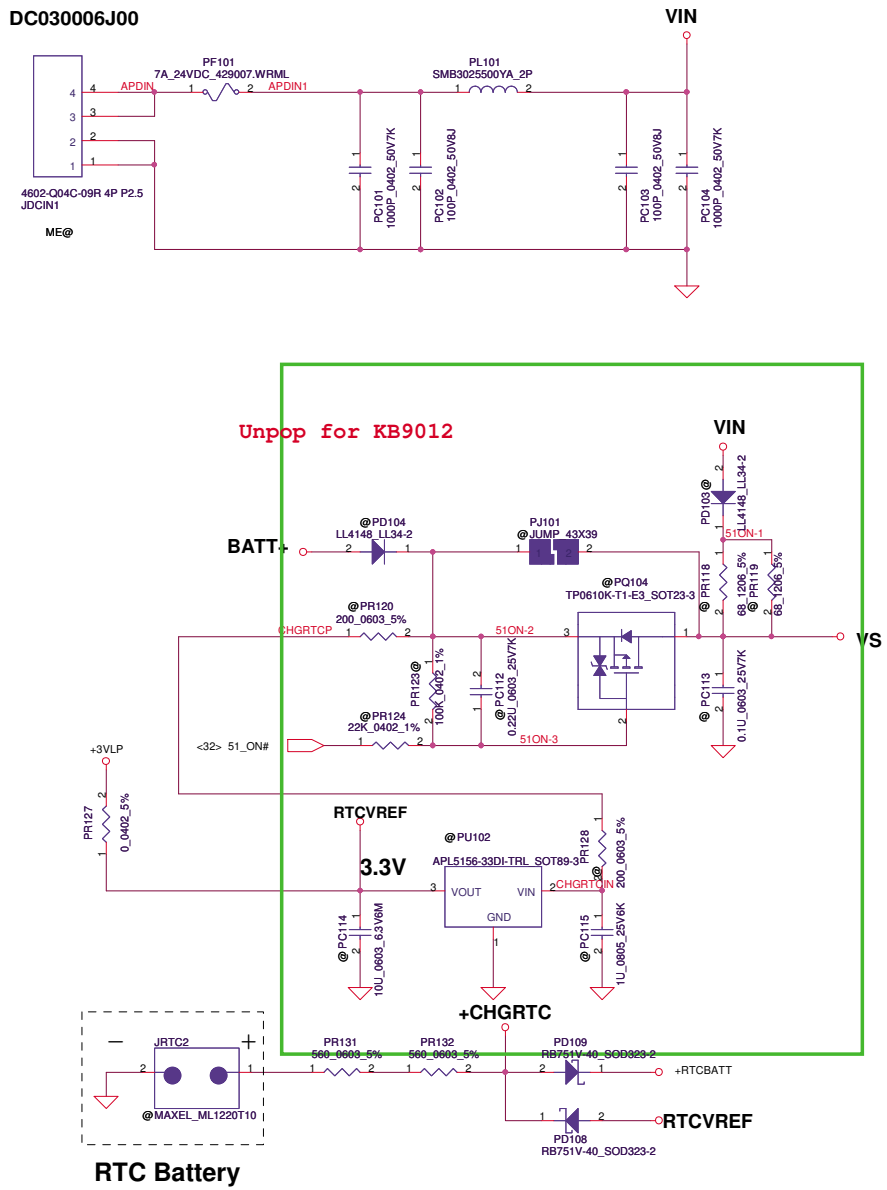


| | | | |
|---|---|---|---|
| Security Classification | Compal Secret Data | | |
| Issued Date | 2011/10/12 | Deciphered Date | 2013/10/12 |

THIS SHEET OF ENGINEERING DRAWING IS THE PROPRIETARY PROPERTY OF COMPAL ELECTRONICS, INC. AND CONTAINS CONFIDENTIAL AND TRADE SECRET INFORMATION. THIS SHEET MAY NOT BE TRANSFERED FROM THE CUSTODY OF THE COMPETENT DIVISION OF R&D DEPARTMENT EXCEPT AS AUTHORIZED BY COMPAL ELECTRONICS, INC. NEITHER THIS SHEET NOR THE INFORMATION IT CONTAINS MAY BE USED BY OR DISCLOSED TO ANY THIRD PARTY WITHOUT PRIOR WRITTEN CONSENT OF COMPAL ELECTRONICS, INC.

**Compal Electronics, Inc.**

Title: **PWR DCIN**

Size: Custom | Document Number | Rev 0.1

Date: Wednesday, November 30, 2011 | Sheet 36 of 48

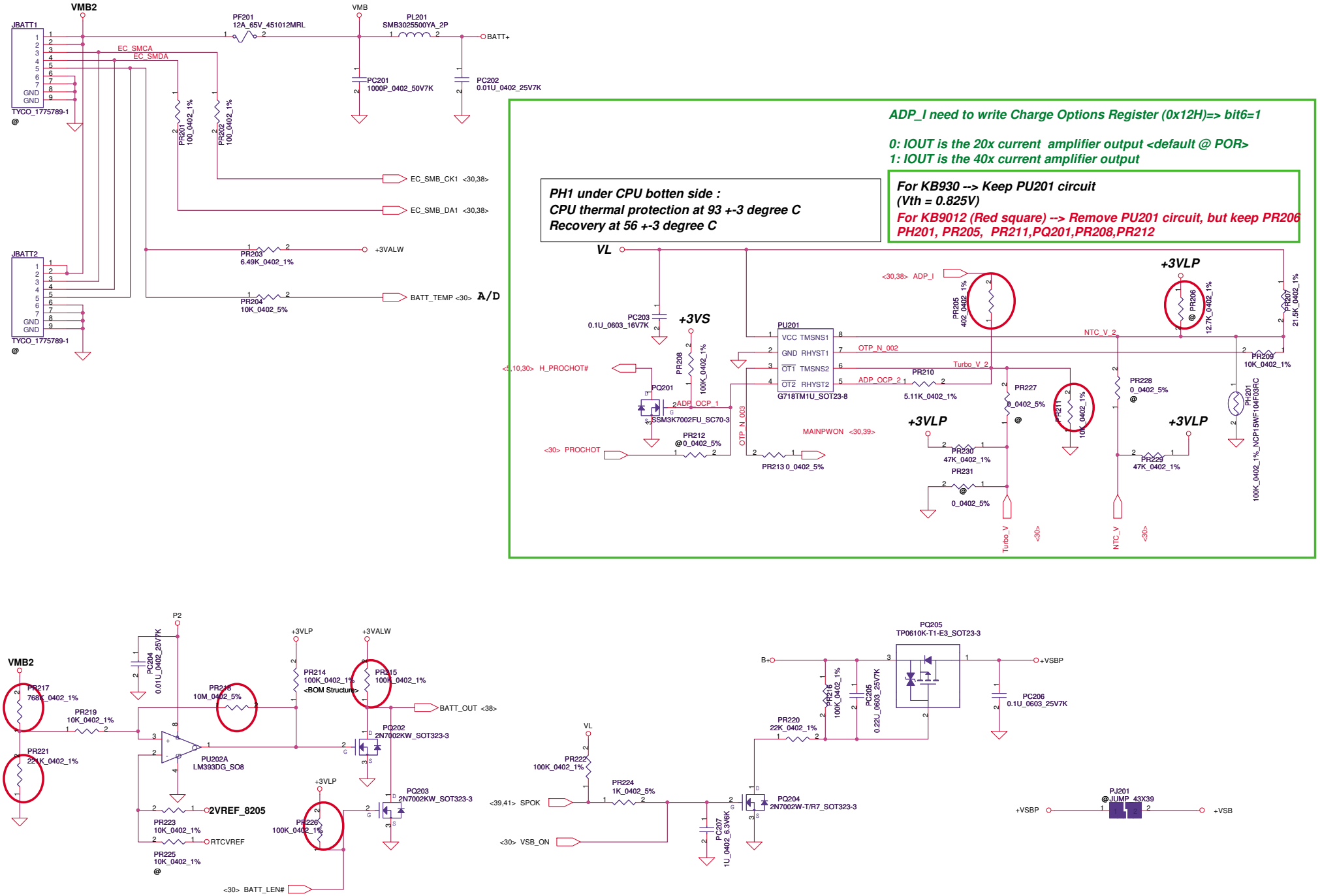


| Security Classification | Compal Secret Data | | |
|---|---|---|---|
| Issued Date | 2011/10/12 | Deciphered Date | 2013/10/12 |

THIS SHEET OF ENGINEERING DRAWING IS THE PROPRIETARY PROPERTY OF COMPAL ELECTRONICS, INC. AND CONTAINS CONFIDENTIAL AND TRADE SECRET INFORMATION. THIS SHEET MAY NOT BE TRANSFERED FROM THE CUSTODY OF THE COMPETENT DIVISION OF R&D DEPARTMENT EXCEPT AS AUTHORIZED BY COMPAL ELECTRONICS, INC. NEITHER THIS SHEET NOR THE INFORMATION IT CONTAINS MAY BE USED BY OR DISCLOSED TO ANY THIRD PARTY WITHOUT PRIOR WRITTEN CONSENT OF COMPAL ELECTRONICS, INC.

Compal Electronics, Inc.

Title: PWR-BATTERY CONN/OTP

Size: Custom | Document Number | Rev 0.1

Date: Wednesday, November 30, 2011 | Sheet 37 of 48

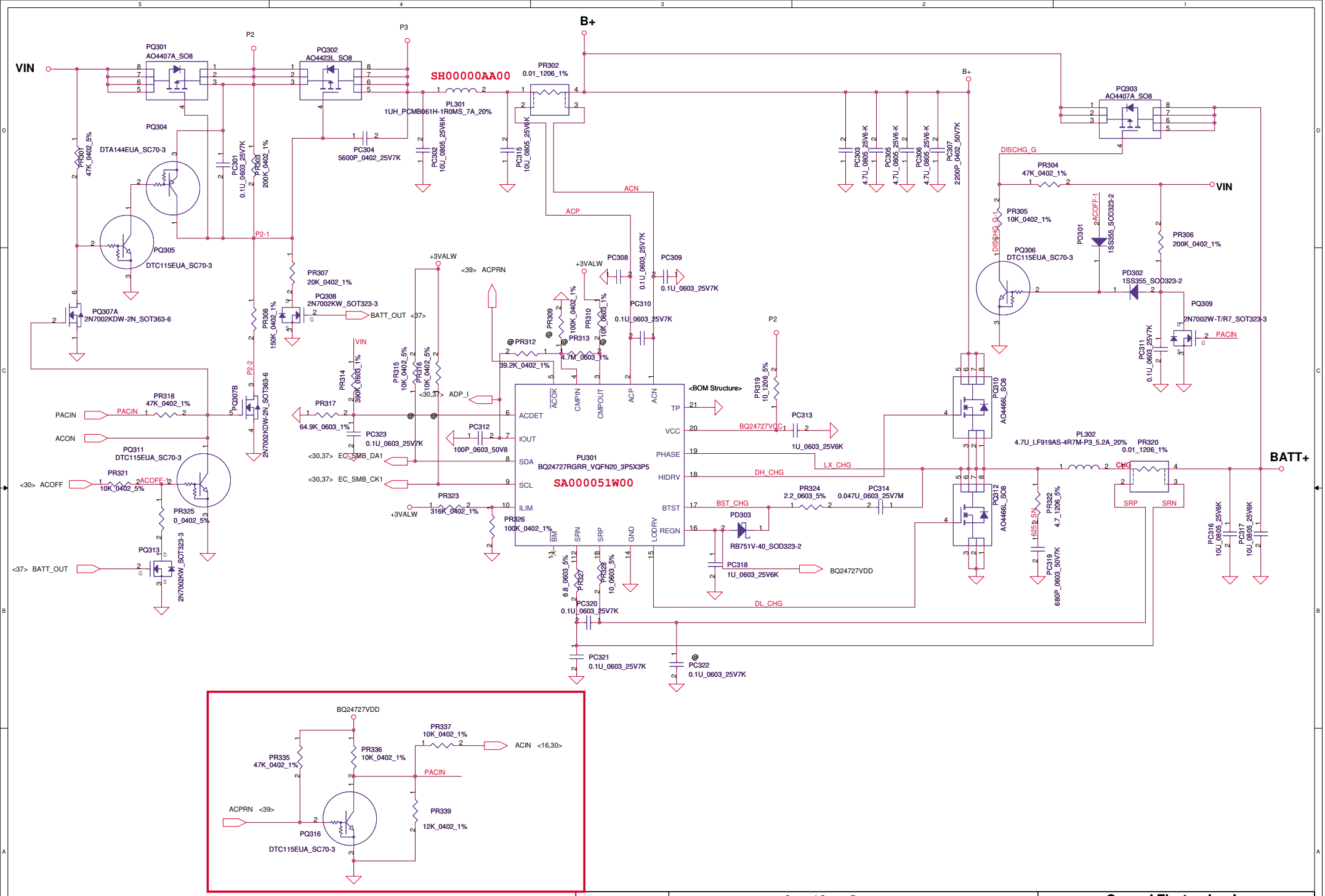


| Security Classification | Compal Secret Data | | |
|---|---|---|---|
| Issued Date | 2011/10/12 | Deciphered Date | 2013/10/12 |

THIS SHEET OF ENGINEERING DRAWING IS THE PROPRIETARY PROPERTY OF COMPAL ELECTRONICS, INC. AND CONTAINS CONFIDENTIAL AND TRADE SECRET INFORMATION. THIS SHEET MAY NOT BE TRANSFERED FROM THE CUSTODY OF THE COMPETENT DIVISION OF R&D DEPARTMENT EXCEPT AS AUTHORIZED BY COMPAL ELECTRONICS, INC. NEITHER THIS SHEET NOR THE INFORMATION IT CONTAINS MAY BE USED BY OR DISCLOSED TO ANY THIRD PARTY WITHOUT PRIOR WRITTEN CONSENT OF COMPAL ELECTRONICS, INC.

**Compal Electronics, Inc.**

Title: **CHARGER**

Size | Document Number | Rev 0.1

Date: Wednesday, November 30, 2011 | Sheet 38 of 48

Note:
Use TPS51125 IC can remove RTC refernece LDO
Use TPS51427 IC must keep RTC refernece LDO

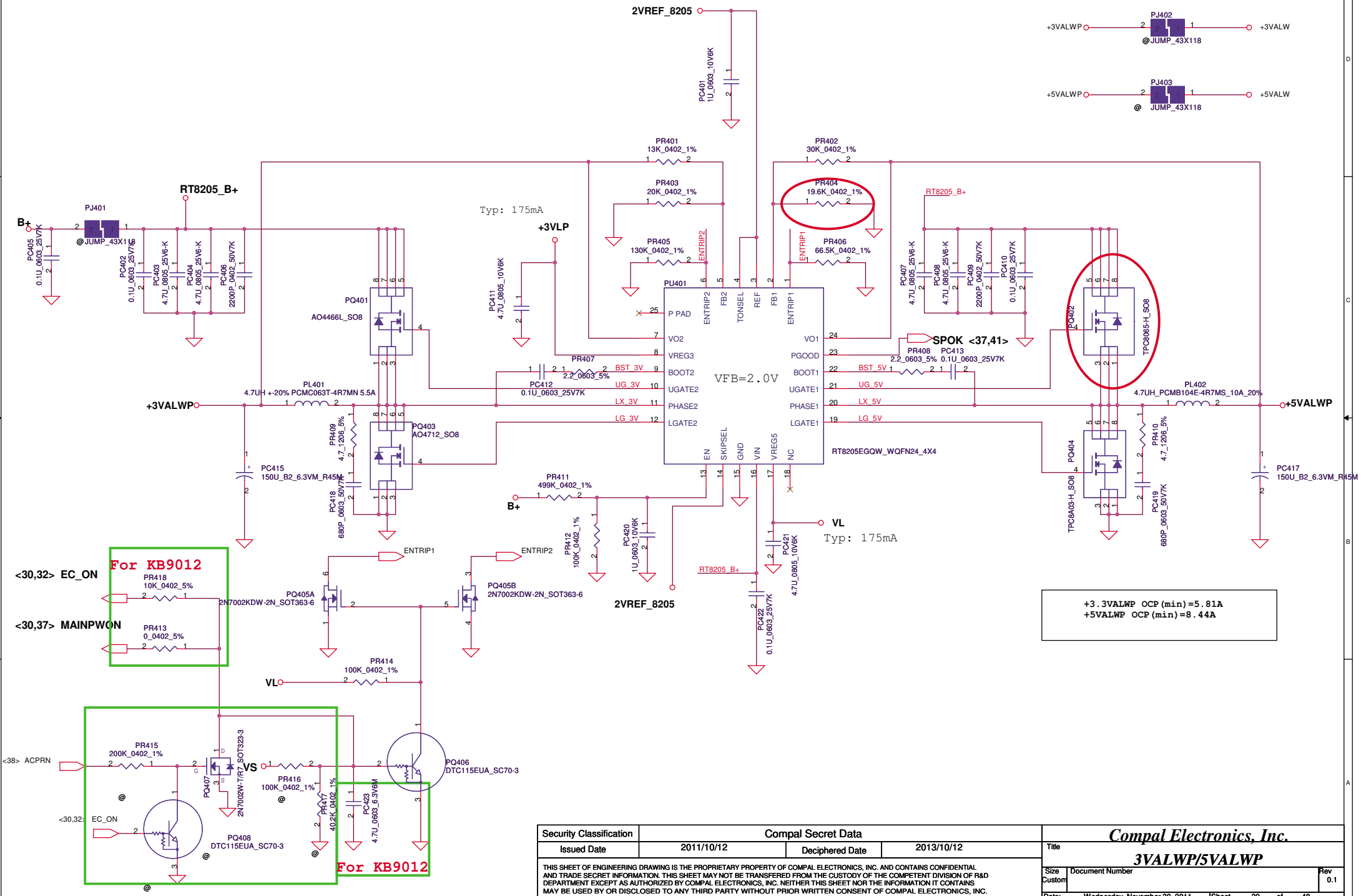


| Security Classification | Compal Secret Data | | |
|---|---|---|---|
| Issued Date | 2011/10/12 | Deciphered Date | 2013/10/12 |

THIS SHEET OF ENGINEERING DRAWING IS THE PROPRIETARY PROPERTY OF COMPAL ELECTRONICS, INC. AND CONTAINS CONFIDENTIAL AND TRADE SECRET INFORMATION. THIS SHEET MAY NOT BE TRANSFERED FROM THE CUSTODY OF THE COMPETENT DIVISION OF R&D DEPARTMENT EXCEPT AS AUTHORIZED BY COMPAL ELECTRONICS, INC. NEITHER THIS SHEET NOR THE INFORMATION IT CONTAINS MAY BE USED BY OR DISCLOSED TO ANY THIRD PARTY WITHOUT PRIOR WRITTEN CONSENT OF COMPAL ELECTRONICS, INC.

**Compal Electronics, Inc.**

Title: **3VALWP/5VALWP**

Size: Custom | Document Number | Rev 0.1

Date: Wednesday, November 30, 2011 | Sheet 39 of 48

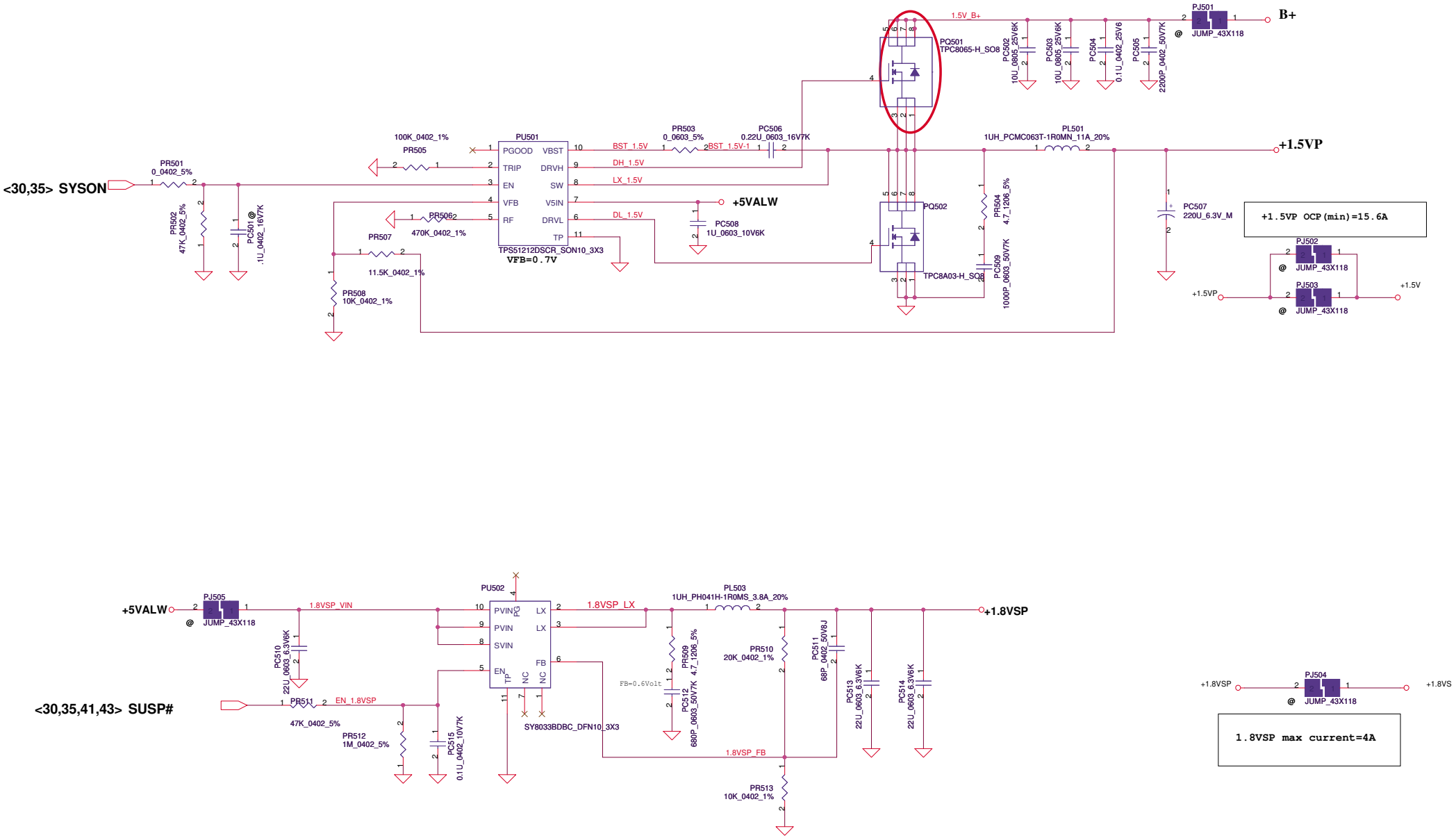


| Security Classification | Compal Secret Data | | |
|---|---|---|---|
| Issued Date | 2011/10/12 | Deciphered Date | 2013/10/12 |

THIS SHEET OF ENGINEERING DRAWING IS THE PROPRIETARY PROPERTY OF COMPAL ELECTRONICS, INC. AND CONTAINS CONFIDENTIAL AND TRADE SECRET INFORMATION. THIS SHEET MAY NOT BE TRANSFERED FROM THE CUSTODY OF THE COMPETENT DIVISION OF R&D DEPARTMENT EXCEPT AS AUTHORIZED BY COMPAL ELECTRONICS, INC. NEITHER THIS SHEET NOR THE INFORMATION IT CONTAINS MAY BE USED BY OR DISCLOSED TO ANY THIRD PARTY WITHOUT PRIOR WRITTEN CONSENT OF COMPAL ELECTRONICS, INC.

**Compal Electronics, Inc.**

Title: **PWR-+1.5VP/+1.8VSP**

Size: Custom | Document Number | Rev: 0.1

Date: Wednesday, November 30, 2011 | Sheet 40 of 48

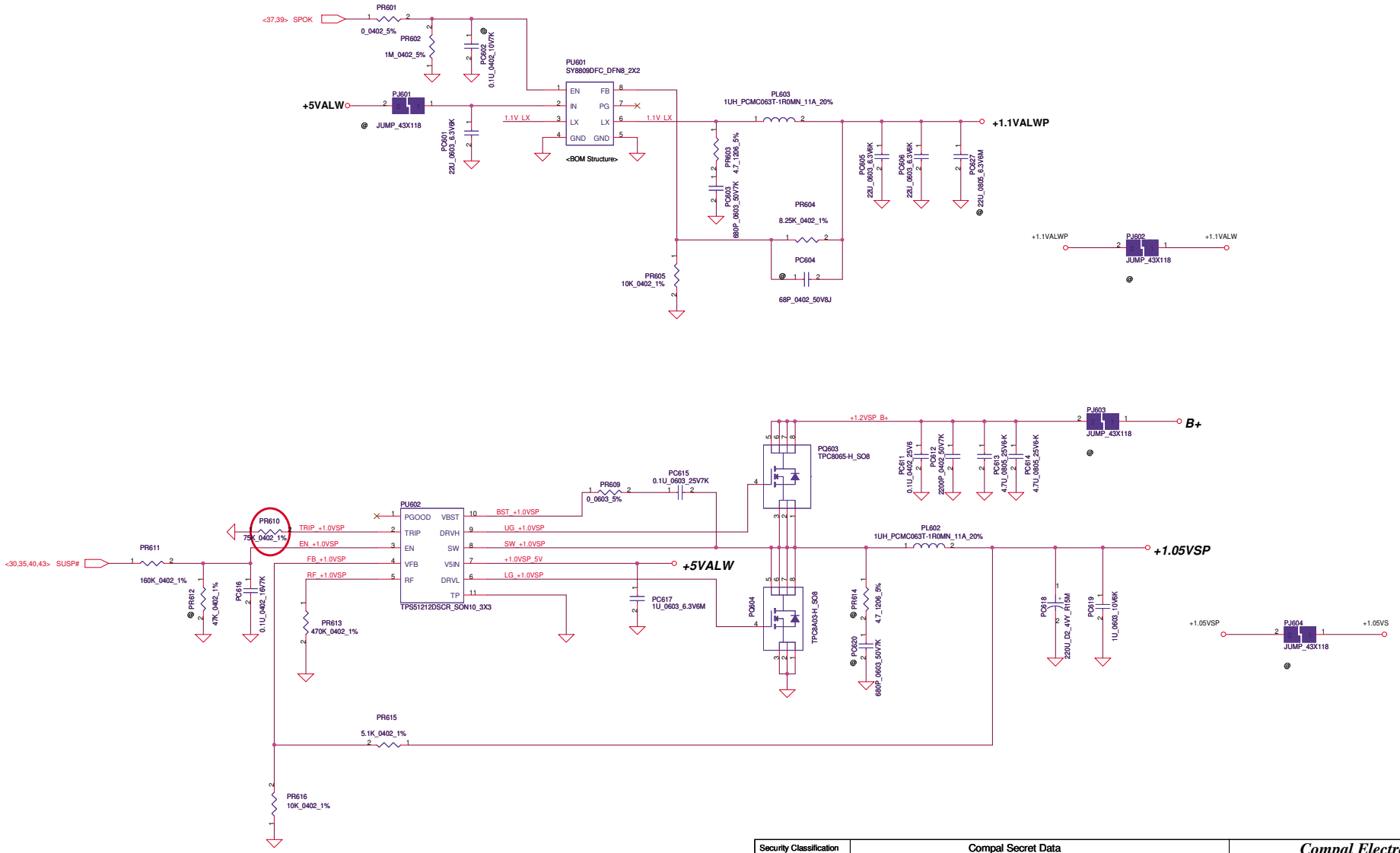


| Security Classification | Compal Secret Data | | |
|---|---|---|---|
| Issued Date | 2011/10/12 | Deciphered Date | 2013/10/12 |

THIS SHEET OF ENGINEERING DRAWING IS THE PROPRIETARY PROPERTY OF COMPAL ELECTRONICS, INC. AND CONTAINS CONFIDENTIAL AND TRADE SECRET INFORMATION. THIS SHEET MAY NOT BE TRANSFERED FROM THE CUSTODY OF THE COMPETENT DIVISION OF R&D DEPARTMENT EXCEPT AS AUTHORIZED BY COMPAL ELECTRONICS, INC. NEITHER THIS SHEET NOR THE INFORMATION IT CONTAINS MAY BE USED BY OR DISCLOSED TO ANY THIRD PARTY WITHOUT PRIOR WRITTEN CONSENT OF COMPAL ELECTRONICS, INC.

**Compal Electronics, Inc.**

Title: **PWR +1.1VALWP/+1.0VSP**

Size: C | Document Number | Rev: 0.1

Date: Wednesday, November 30, 2011 | Sheet 41 of 48

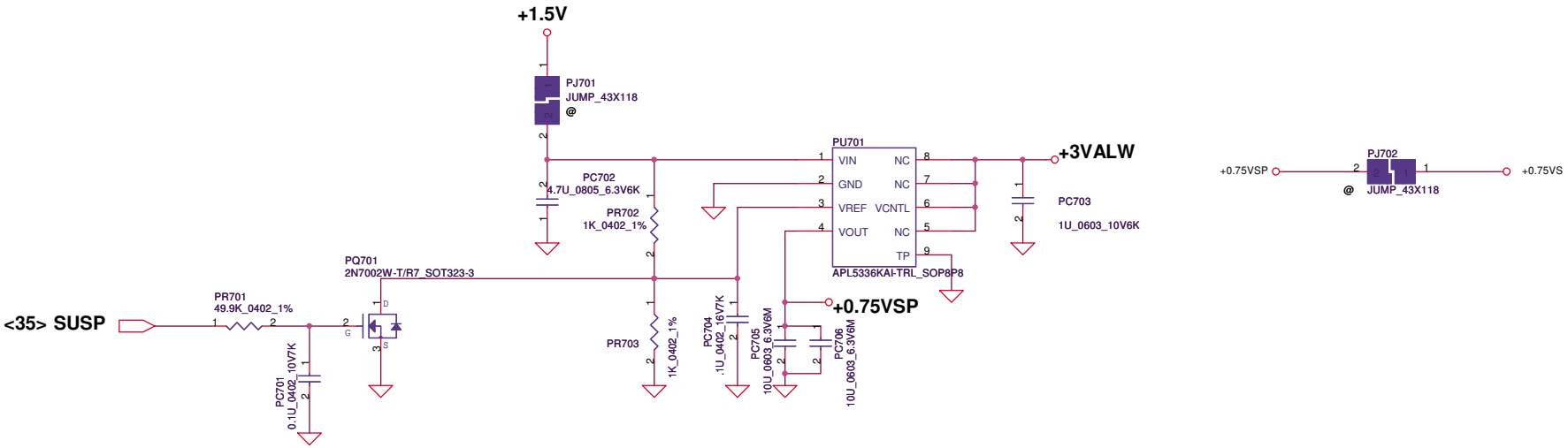


| Security Classification | Compal Secret Data | | |
|---|---|---|---|
| Issued Date | 2011/10/12 | Deciphered Date | 2013/10/12 |

THIS SHEET OF ENGINEERING DRAWING IS THE PROPRIETARY PROPERTY OF COMPAL ELECTRONICS, INC. AND CONTAINS CONFIDENTIAL AND TRADE SECRET INFORMATION. THIS SHEET MAY NOT BE TRANSFERED FROM THE CUSTODY OF THE COMPETENT DIVISION OF R&D DEPARTMENT EXCEPT AS AUTHORIZED BY COMPAL ELECTRONICS, INC. NEITHER THIS SHEET NOR THE INFORMATION IT CONTAINS MAY BE USED BY OR DISCLOSED TO ANY THIRD PARTY WITHOUT PRIOR WRITTEN CONSENT OF COMPAL ELECTRONICS, INC.

**Compal Electronics, Inc.**

Title: **PWR +0.75VSP**

Size: Custom | Document Number | Rev: 0.1

Date: Wednesday, November 30, 2011 | Sheet 42 of 48

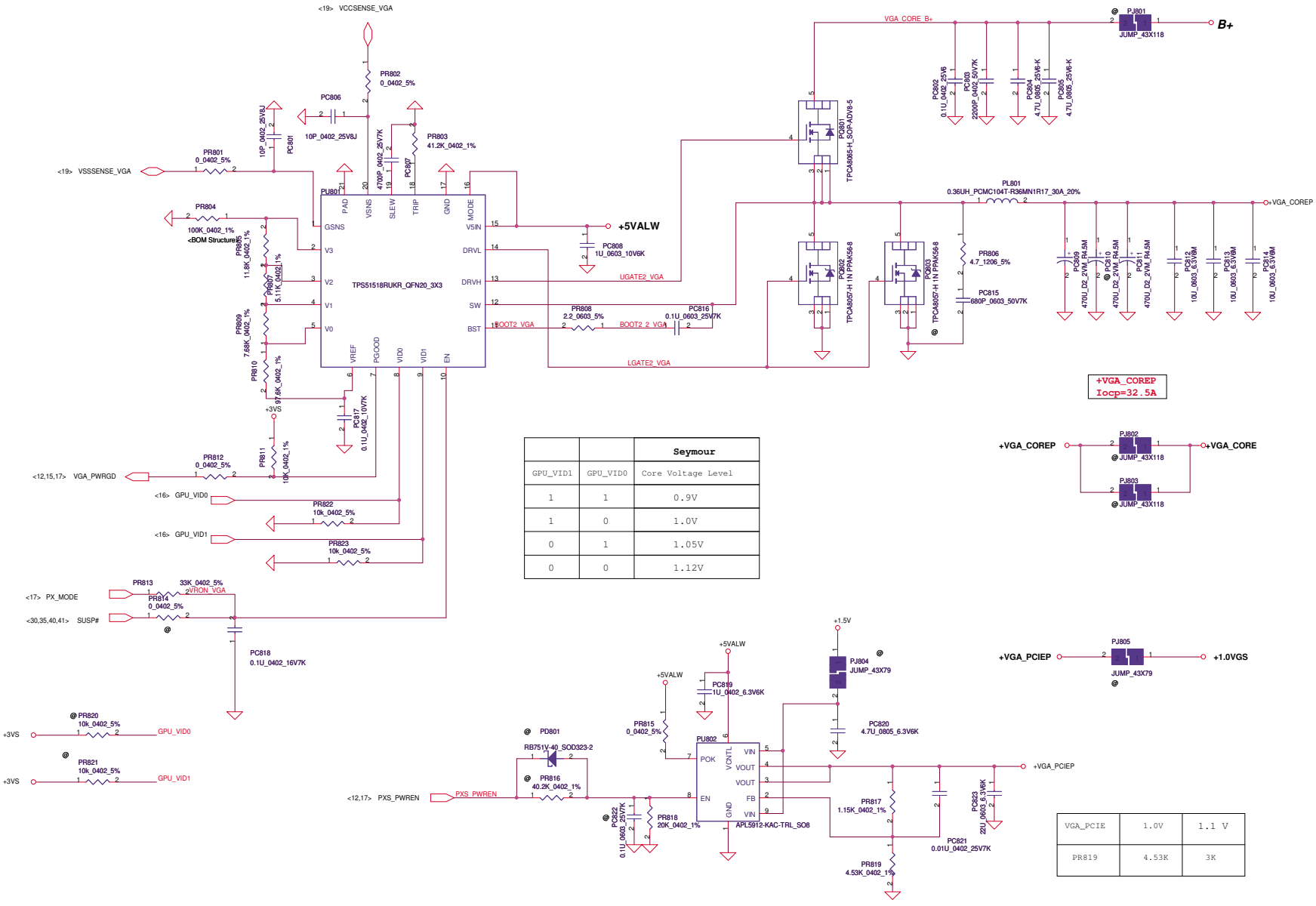


| | | Seymour |
|---|---|---|
| GPU_VID1 | GPU_VID0 | Core Voltage Level |
| 1 | 1 | 0.9V |
| 1 | 0 | 1.0V |
| 0 | 1 | 1.05V |
| 0 | 0 | 1.12V |

| | | | |
|---|---|---|---|
| Security Classification | Compal Secret Data | | |
| Issued Date | 2011/10/12 | Deciphered Date | 2013/10/12 |

THIS SHEET OF ENGINEERING DRAWING IS THE PROPRIETARY PROPERTY OF COMPAL ELECTRONICS, INC. AND CONTAINS CONFIDENTIAL AND TRADE SECRET INFORMATION. THIS SHEET MAY NOT BE TRANSFERED FROM THE CUSTODY OF THE COMPETENT DIVISION OF R&D DEPARTMENT EXCEPT AS AUTHORIZED BY COMPAL ELECTRONICS, INC. NEITHER THIS SHEET NOR THE INFORMATION IT CONTAINS MAY BE USED BY OR DISCLOSED TO ANY THIRD PARTY WITHOUT PRIOR WRITTEN CONSENT OF COMPAL ELECTRONICS, INC.

**Compal Electronics, Inc.**

Title: **PWR-VGA_CORE/VGA_PCIE**

Size | Document Number | Rev 0.1

Date: Wednesday, November 30, 2011 | Sheet 43 of 48

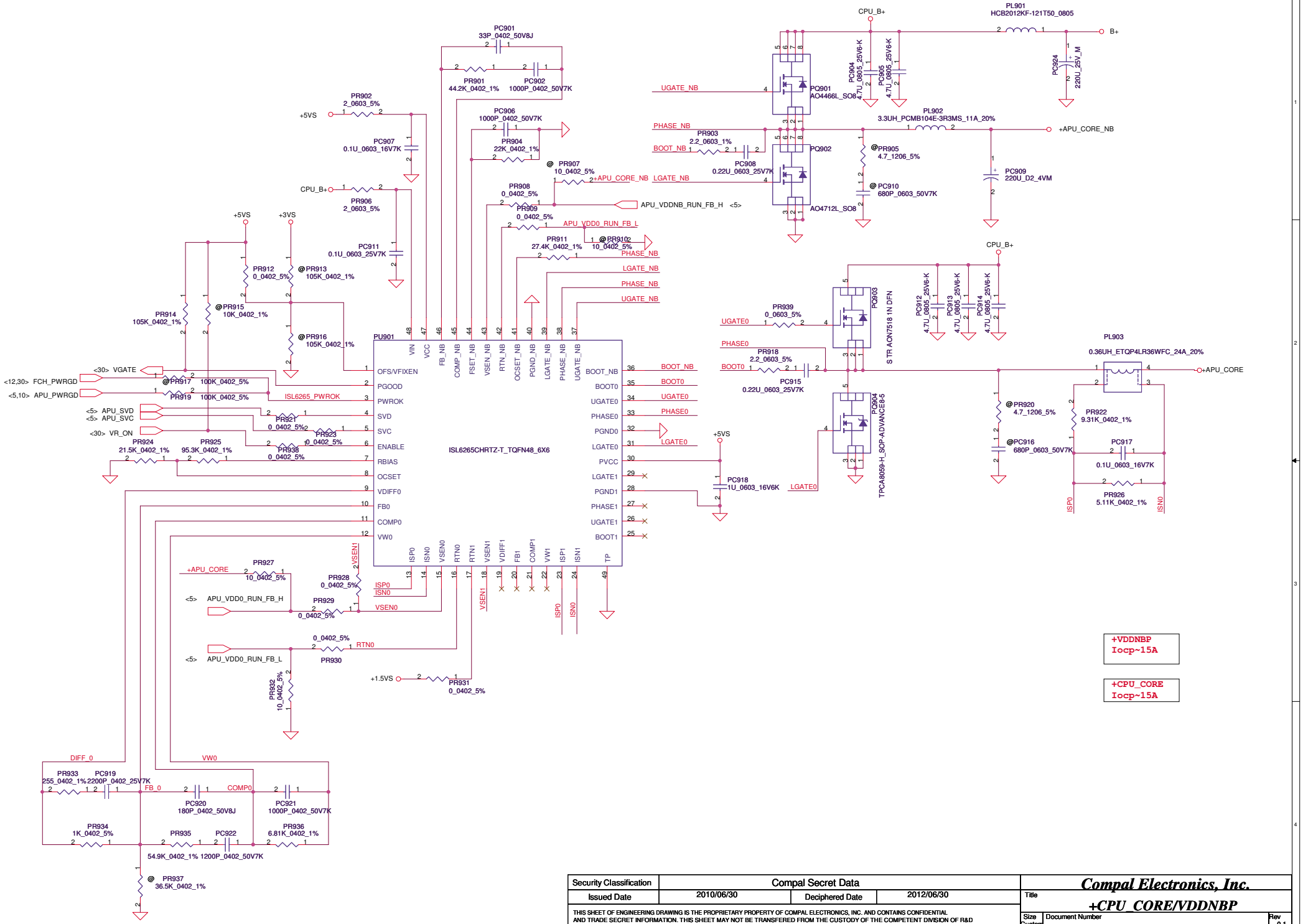


| Security Classification | Compal Secret Data | | |
|---|---|---|---|
| Issued Date | 2010/06/30 | Deciphered Date | 2012/06/30 |

THIS SHEET OF ENGINEERING DRAWING IS THE PROPRIETARY PROPERTY OF COMPAL ELECTRONICS, INC. AND CONTAINS CONFIDENTIAL AND TRADE SECRET INFORMATION. THIS SHEET MAY NOT BE TRANSFERED FROM THE CUSTODY OF THE COMPETENT DIVISION OF R&D DEPARTMENT EXCEPT AS AUTHORIZED BY COMPAL ELECTRONICS, INC. NEITHER THIS SHEET NOR THE INFORMATION IT CONTAINS MAY BE USED BY OR DISCLOSED TO ANY THIRD PARTY WITHOUT PRIOR WRITTEN CONSENT OF COMPAL ELECTRONICS, INC.

**Compal Electronics, Inc.**

Title: **+CPU_CORE/VDDNBP**

Size: Custom | Document Number | Rev 0.1

Date: Wednesday, November 30, 2011 | Sheet 44 of 48

## +CPU_CORE

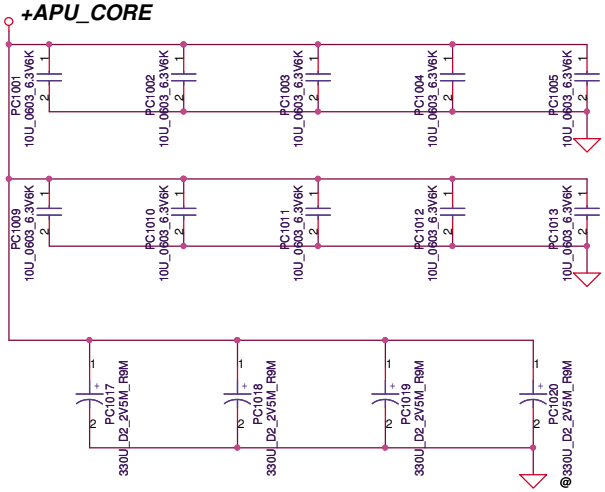


## +CPU_CORE_NB

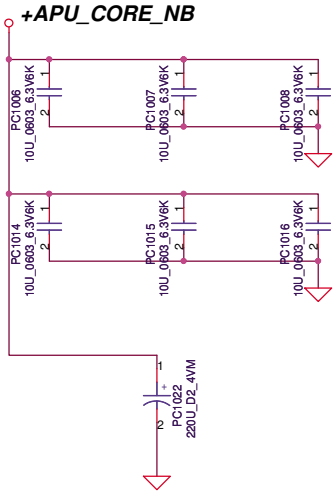


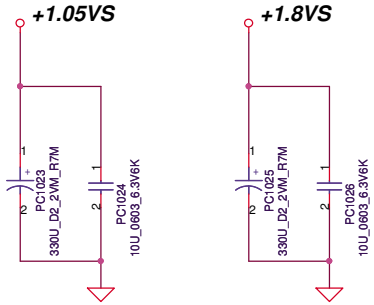


| Security Classification | Compal Secret Data | | |
|---|---|---|---|
| Issued Date | 2011/10/12 | Deciphered Date | 2013/10/12 |

THIS SHEET OF ENGINEERING DRAWING IS THE PROPRIETARY PROPERTY OF COMPAL ELECTRONICS, INC. AND CONTAINS CONFIDENTIAL AND TRADE SECRET INFORMATION. THIS SHEET MAY NOT BE TRANSFERED FROM THE CUSTODY OF THE COMPETENT DIVISION OF R&D DEPARTMENT EXCEPT AS AUTHORIZED BY COMPAL ELECTRONICS, INC. NEITHER THIS SHEET NOR THE INFORMATION IT CONTAINS MAY BE USED BY OR DISCLOSED TO ANY THIRD PARTY WITHOUT PRIOR WRITTEN CONSENT OF COMPAL ELECTRONICS, INC.

**Compal Electronics, Inc.**

Title: **PWR - PROCESSOR DECOUPLING**

Size | Document Number | Rev 0.1

Date: Tuesday, November 29, 2011 | Sheet 45 of 48

# Version change list (P.I.R. List)



| Item | Reason for change | PG# | Modify List | Date | Phase |
|---|---|---|---|---|---|
| 1 | (CPU CORE/VDDNBP)...VR_ON增加PR938 | | | | |
| 2 | 0402 0 歐姆 | | | | |
| 3 | APU_CORE_NB....PC1021拿掉 | | | | |
| 4 | | | | | |
| 5 | | | | | |
| 6 | | | | | |
| 7 | | | | | |
| 8 | | | | | |
| 9 | | | | | |
| 10 | | | | | |
| 11 | | | | | |
| 12 | | | | | |
| 13 | | | | | |
| 14 | | | | | |
| 15 | | | | | |
| 16 | | | | | |
| 17 | | | | | |

THIS SHEET OF ENGINEERING DRAWING IS THE PROPRIETARY PROPERTY OF COMPAL ELECTRONICS, INC. AND CONTAINS CONFIDENTIAL AND TRADE SECRET INFORMATION. THIS SHEET MAY NOT BE TRANSFERED FROM THE CUSTODY OF THE COMPETENT DIVISION OF R&D DEPARTMENT EXCEPT AS AUTHORIZED BY COMPAL ELECTRONICS, INC. NEITHER THIS SHEET NOR THE INFORMATION IT CONTAINS MAY BE USED BY OR DISCLOSED TO ANY THIRD PARTY WITHOUT PRIOR WRITTEN CONSENT OF COMPAL ELECTRONICS, INC.

| | | | |
|---|---|---|---|
| Security Classification | Compal Secret Data | | |
| Issued Date | 2011/10/12 | Deciphered Date | 2013/10/12 |

**Compal Electronics, Inc.**

Title: **PIR (PWR)**

Size: Custom | Document Number | Rev: 0.1

Date: Tuesday, November 29, 2011 | Sheet 46 of 48

# QAWGE Power Sequence (AC mode)

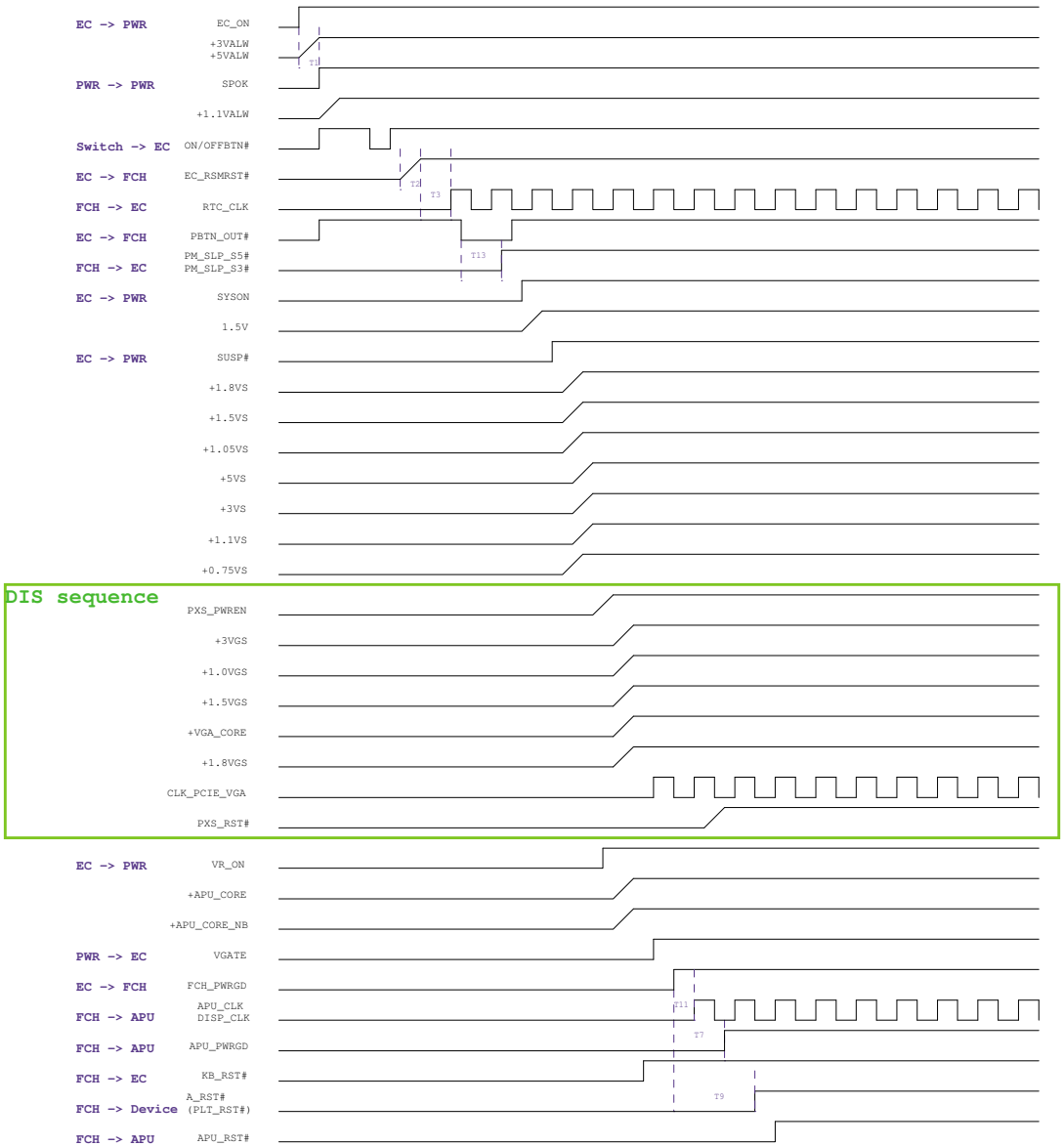


1ms< T1 < 100ms : +3VALW rising time, for LAN chip request
+3VALW need rampe up before +1.1VALW or at the same time.

T2 < 50ms : EC_RSMRST# rising time
+3VALW need rampe up before EC_RSMRST# de-assertion at least 10ms
+1.1VALW need rampe up before EC_RSMRST# de-assertion
T3 > 16ms : EC_RSMRST# de-assert to start RTCCLK

T13 > 200ns : PBTN_OUT# to SLP_S3#/S5# de-assertion

+3VS need rampe up before +1.1VS or at the same time.

The time delay between PXS_PWREN assertion
and PXS_RST# de-assertion must be more than 100ms.

CLK_PCIE_VGA should be 100us earlier than PXS_RST# de-assert.

T11< 32ms : FCH_POK assertion to clock out

98ms< T7< 150ms : FCH_POK assertion to APU_PWRGD

KB_RST# should be de-asserted before FCH_POK

101ms< T9< 113ms :
FCH_POK assertion to A_RST# de-assertion

| Security Classification | Compal Secret Data | | |
|---|---|---|---|
| Issued Date | 2011/10/12 | Deciphered Date | 2013/10/12 |

THIS SHEET OF ENGINEERING DRAWING IS THE PROPRIETARY PROPERTY OF COMPAL ELECTRONICS, INC. AND CONTAINS CONFIDENTIAL AND TRADE SECRET INFORMATION. THIS SHEET MAY NOT BE TRANSFERED FROM THE CUSTODY OF THE COMPETENT DIVISION OF R&D DEPARTMENT EXCEPT AS AUTHORIZED BY COMPAL ELECTRONICS, INC. NEITHER THIS SHEET NOR THE INFORMATION IT CONTAINS MAY BE USED BY OR DISCLOSED TO ANY THIRD PARTY WITHOUT PRIOR WRITTEN CONSENT OF COMPAL ELECTRONICS, INC.

**Compal Electronics, Inc.**

Title: **PWR - PROCESSOR DECOUPLING**

Size | Document Number | Rev 0.1

Date: Tuesday, November 29, 2011 | Sheet 47 of 47