DAKAR10ABX

CS

2012.02.06

Dr-Bios.com

INVENTEC			
TITLE Dakar10ABGP Block Diagram			
SIZE A3	CODE CS	DOC.NUMBER 1310xxxxx-0-0	REV X01
CHANGE by Parry Huang	DATE 21-OCT-2002	SHEET 1 of 57	

PAGE NO/FUNCTION

1. COVER PAGE
2. INDEX
3. BLOCK DIAGRAM
4. POWER MAP
5. CHARGER
6. P3V3 P5V0
7. DDR POWER
8. P1V1A P1VAS
9. P1V0S
10. P1V8
11. VCORE
12. VCORE-1
13. DGPU POWER
14. ENABLE PIN
15. LOAD SWITCH
16. SCREW & FIX MASK
17. HALL SENSOR
18. LED
19. K/B & T/P
20. SUPER I/O(KBC)
21. LAN
22. RJ45 & TRANSFORMER
23. AUDIO CODEC
24. MIC & EARPHONE
25. WLAN
26. CARDER READER
27. HDD & ODD

PAGE NO/FUNCTION

28. USB2.0
29. USB S/G
30. LVDS
31. VGA
32. HDMI
33. CEC
34. DIMM0
35. DIMM1
36. FAN & THERMAL
37. APU(1/4)
38. APU(2/4)
39. APU(3/4)
40. APU(4/4)
41. FCH M3(1/4)
42. FCH M3(2/4)
43. FCH M3(3/4)
44. FCH M3(4/4)
45. EMI
46. GPU(1/6)
47. GPU(2/6)
48. GPU(3/6)
49. GPU(4/6)
50. GPU(5/6)
51. GPU(6/6)
52. VRAM-1
53. VRAM-2
54. PW BOARD
55. TP 4 PIN BOARD
56. USB BOARD
57. TP 8 PIN BOARD

Dr-Bios.com

INVENTEC

TITLE: Dakar10ABGP Block Diagram

SIZE	CODE	DOC.NUMBER	REV
A3	CS	1310xxxxx-0-0	X01

CHANGE by Parry Huang | DATE 21-OCT-2002 | SHEET 2 of 57

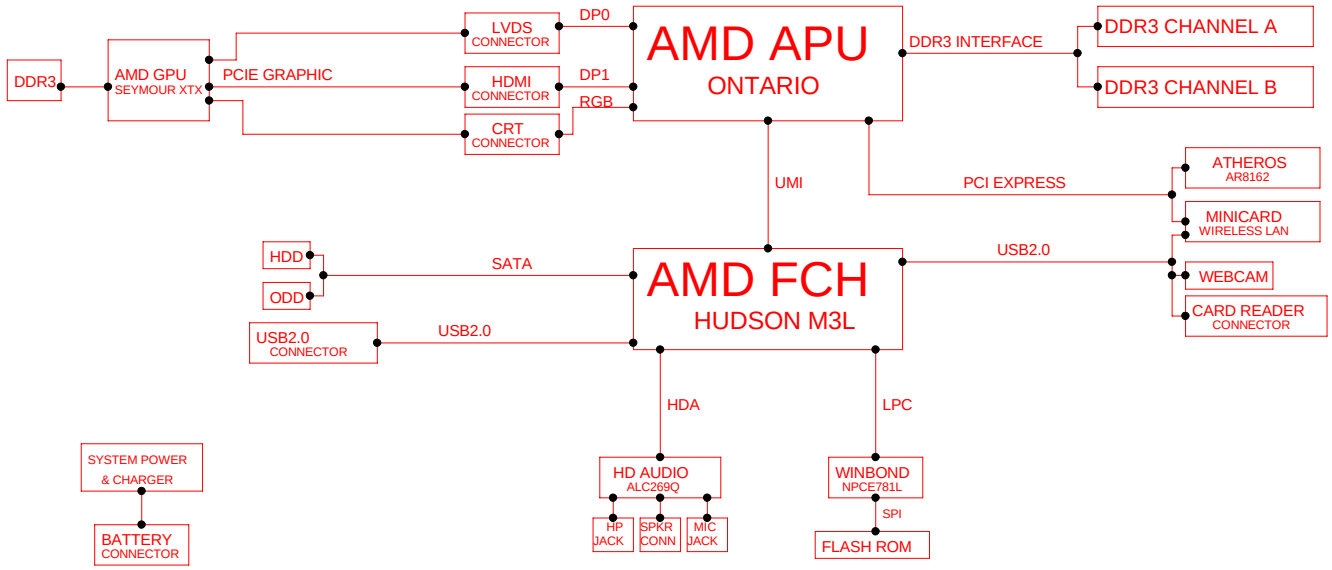

Dr-Bios.com

INVENTEC

TITLE
Dakar10ABGP
Block Diagram

SIZE	CODE	DOC.NUMBER	REV
A3	CS	1310xxxxx-0-0	X01

CHANGE by Parry Huang | DATE 21-OCT-2002 | SHEET 3 of 57

ADAPTOR

FUSE

65W-75W 8A 6036A0003401
90W 10A 6036A0002901
120W 12A 6036A0006001

BQ24725RGRR
CHARGER

EC_SMB2
CHG_EN
BATT_IN
ACPRES

BATTERY PACK

+VBAT

TPS51123

POWER BUDGET 8.150 A
F 300K
OCP 10.4A R=120K
PEAK 7.283A AVG 2.363A
220UF_25M£[// 53.92UF_1.529M£[

+V5A_+-5%

NMOS

POWER BUDGET 5.90A INRUSH 0.9A
PEAK2.592A 100.82UF_0.842M£[

+V5S

+VCORE_+-0.5%

+VCORE_NB_+-0.5%

ISL6267

POWER BUDGET 21A
F 300K
OCP 23A
PEAK 21A AVG 12.05A
1880UF_1.1M£[// 2276UF_0.203M£[

TPS51123

POWER BUDGET 10.199 A
F 375K
OCP 10.7A R=130K
PEAK 5.695A AVG1.048 A
220UF_25M£[//10.6UF_5.924M£[

+V3LA_+-5%

NMOS

POWER BUDGET 0.638A INRUSH 0.A
PEAK2.592A 100.82UF_0.842M£[

+V3A

RT8068

POWER BUDGET 0.290 A
PEAK2.592A 100.82UF_0.842M£[

+V1.1A

NMOS

POWER BUDGET 4.024A INRUSH 0.A
PEAK2.592A 100.82UF_0.842M£[

+V3S

RT8068

POWER BUDGET 2.16A
PEAK2.592A 100.82UF_0.842M£[

+V1.8S

RT8068

POWER BUDGET 3.83A
PEAK2.592A 100.82UF_0.842M£[

+V1.1S

VDD_CORE

RT8208B

POWER BUDGET 21.06A
F 340K
OCP 29.1A R=75K
PEAK 20.070A AVG 11.531A
560UF_25M£[// 80UF_0.93M£[

TPS51216

POWER BUDGET 10 A
F 340K
OCP 10.7A R=115K
PEAK 10A AVG4.835 A
560UF_25M£[// 1274.8UF_0.214M£[

+V1.5_+-5%

TPS51216

POWER BUDGET 2A
PEAK2.592A 100.82UF_0.842M£[

+V0.75S

NMOS

POWER BUDGET 4.1A INRUSH 0.9A
PEAK2.592A 100.82UF_0.842M£[

+V1.5S

S0	P*V*S
S3	P*V*
S5	P*V*A

*=NUMBER

TPS51211

POWER BUDGET 5.7 A
F 340K
OCP 7.60A R=115K
PEAK 5.7A AVG4.835 A
560UF_25M£[// 1274.8UF_0.214M£[

+V1.0S_+-5%

NMOS

POWER BUDGET 2.84A INRUSH 0.9A
PEAK2.592A 100.82UF_0.842M£[

+VPCIE

CHANGING POINTS~~
TPS51218 SAME AS 2009 PROJECT
TPS51217 SAME AS 2010 PROJECT
+V1.8S IS NEW IC GMT_AT1530F11U
CHARGE IS NEW IC BQ24725
VCC CORE IS NEW IC TPS51640
VTT IS NEW IC TPS51219
V0.85 IS NEW IC TPS 51641
V3_V5 IS NEW IC TPS51123
POWER BUDGET ~~IC SPEC (MAX CURRENT)
PEAK CURRENT ~~RATIO OF INTERNAL PREDICTION
AVG CURRENT ~~TEST RESULT(MAX CURRENT)
INRUSH ~~L/S TURN NO

Dr-Bios.com

INVENTEC

TITLE
Dakar10ABGP
Block Diagram

SIZE	CODE	DOC.NUMBER	REV
A3	CS	1310xxxxx-0-0	X01

CHANGE by Parry Huang DATE 21-OCT-2002 SHEET 4 of 57

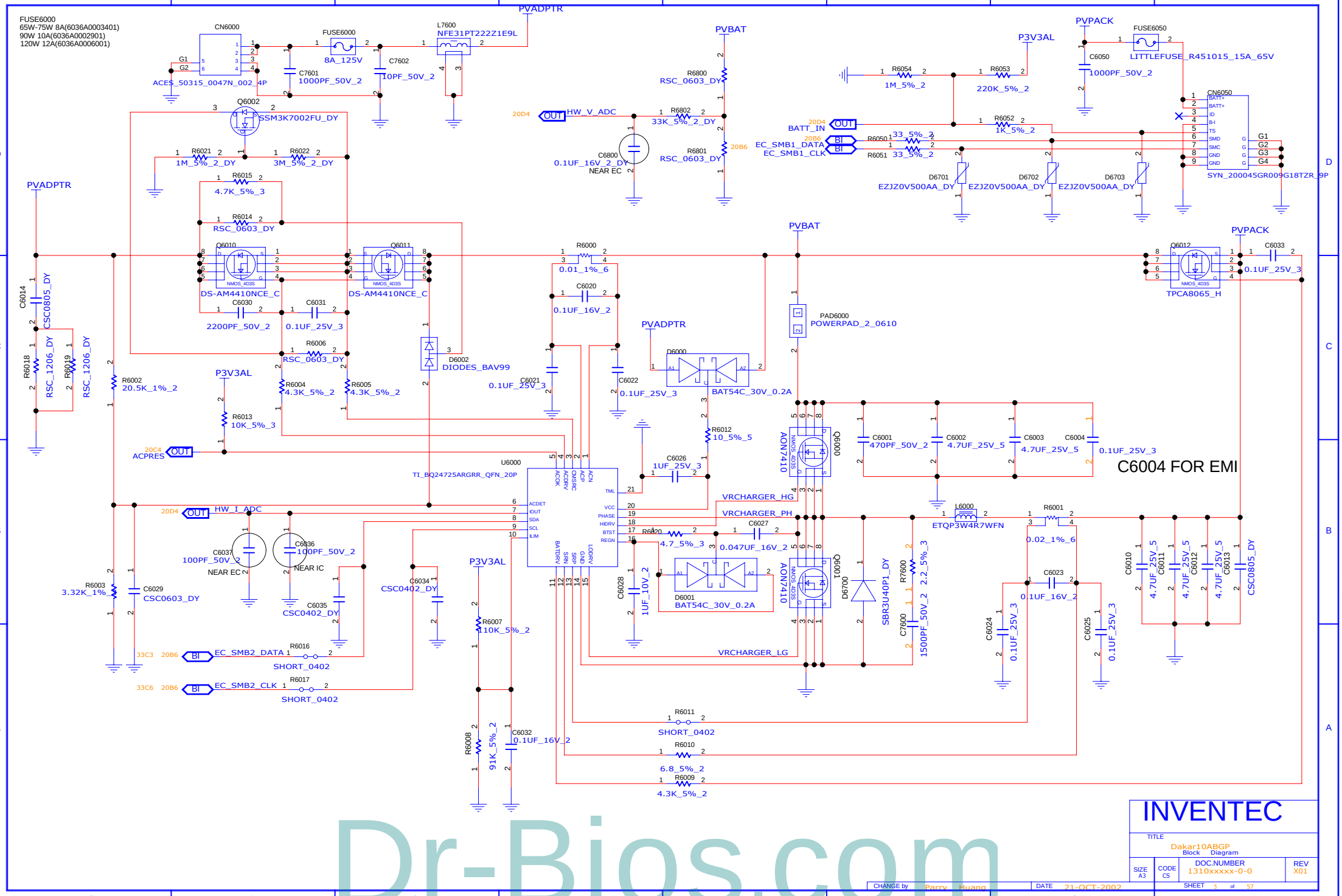
FUSE6000
65W-75W 8A(6036A0003401)
90W 10A(6036A0002901)
120W 12A(6036A0006001)
CN6000
ACES_50315_0047N_002_4P
FUSE6000
8A_125V
C7601
1000PF_50V_2
C7602
10PF_50V_2
L7600
NFE31PT222Z1E9L
PVADPTR
PVBAT
PVPACK
P3V3AL
FUSE6050
LITTLEFUSE_R451015_15A_65V
C6050
1000PF_50V_2
CN6050
SYN_200045GR009G18TZR_9P
Q6002
SSM3K7002FU_DY
R6021
1M_5%_2_DY
R6022
3M_5%_2_DY
R6015
4.7K_5%_3
R6014
RSC_0603_DY
Q6010
DS-AM4410NCE_C
Q6011
DS-AM4410NCE_C
C6030
2200PF_50V_2
C6031
0.1UF_25V_3
R6006
RSC_0603_DY
R6004
4.3K_5%_2
R6005
4.3K_5%_2
D6002
DIODES_BAV99
R6002
20.5K_1%_2
R6013
10K_5%_3
R6018
RSC_1206_DY
R6019
RSC_1206_DY
C6014
CSC0805_DY
20D4
OUT
ACPRES
20C4
HW_V_ADC
R6800
RSC_0603_DY
R6802
33K_5%_2_DY
C6800
0.1UF_16V_2_DY
NEAR EC
R6801
RSC_0603_DY
20B6
BI
EC_SMB1_DATA
EC_SMB1_CLK
R6054
1M_5%_2
R6053
220K_5%_2
R6052
1K_5%_2
R6050
33_5%_2
R6051
33_5%_2
D6701
EZJZ0V500AA_DY
D6702
EZJZ0V500AA_DY
D6703
EZJZ0V500AA_DY
BATT_IN
R6000
0.01_1%_6
C6020
0.1UF_16V_2
C6021
0.1UF_25V_3
C6022
0.1UF_25V_3
D6000
BAT54C_30V_0.2A
PAD6000
POWERPAD_2_0610
Q6012
TPCA8065_H
C6033
0.1UF_25V_3
R6012
10_5%_5
C6026
1UF_25V_3
U6000
TI_BQ24725ARGRR_QFN_20P
ACOK
ACDRV
ACSRC
ACP
ACN
TML
VCC
PHASE
HIDRV
BTST
REGN
ACDET
IOUT
SDA
SCL
ILIM
BATDRV
SRN
SRP
GND
LODRV
VRCHARGER_HG
VRCHARGER_PH
VRCHARGER_LG
Q6000
AON7410
Q6001
AON7410
C6001
470PF_50V_2
C6002
4.7UF_25V_5
C6003
4.7UF_25V_5
C6004
0.1UF_25V_3
C6004 FOR EMI
L6000
ETQP3W4R7WFN
R6001
0.02_1%_6
R6020
4.7_5%_3
C6027
0.047UF_16V_2
D6001
BAT54C_30V_0.2A
C6028
1UF_10V_2
D6700
SBR3U40P1_DY
R7600
2.2_5%_3
C7600
1500PF_50V_2
C6023
0.1UF_16V_2
C6024
0.1UF_25V_3
C6025
0.1UF_25V_3
C6010
4.7UF_25V_5
C6011
4.7UF_25V_5
C6012
4.7UF_25V_5
C6013
4.7UF_25V_5
CSC0805_DY
R6003
3.32K_1%
C6029
CSC0603_DY
C6037
100PF_50V_2
NEAR EC
C6036
100PF_50V_2
NEAR IC
C6035
CSC0402_DY
C6034
CSC0402_DY
20D4
HW_I_ADC
33C3
EC_SMB2_DATA
R6016
SHORT_0402
33C6
EC_SMB2_CLK
R6017
SHORT_0402
R6007
110K_5%_2
R6008
91K_5%_2
C6032
0.1UF_16V_2
R6011
SHORT_0402
R6010
6.8_5%_2
R6009
4.3K_5%_2
INVENTEC
TITLE
Dakar10ABGP
Block Diagram
SIZE A3
CODE CS
DOC.NUMBER 1310xxxxx-0-0
REV X01
CHANGE by Parry Huang
DATE 21-OCT-2002
SHEET 5 of 57

Dr-Bios.com

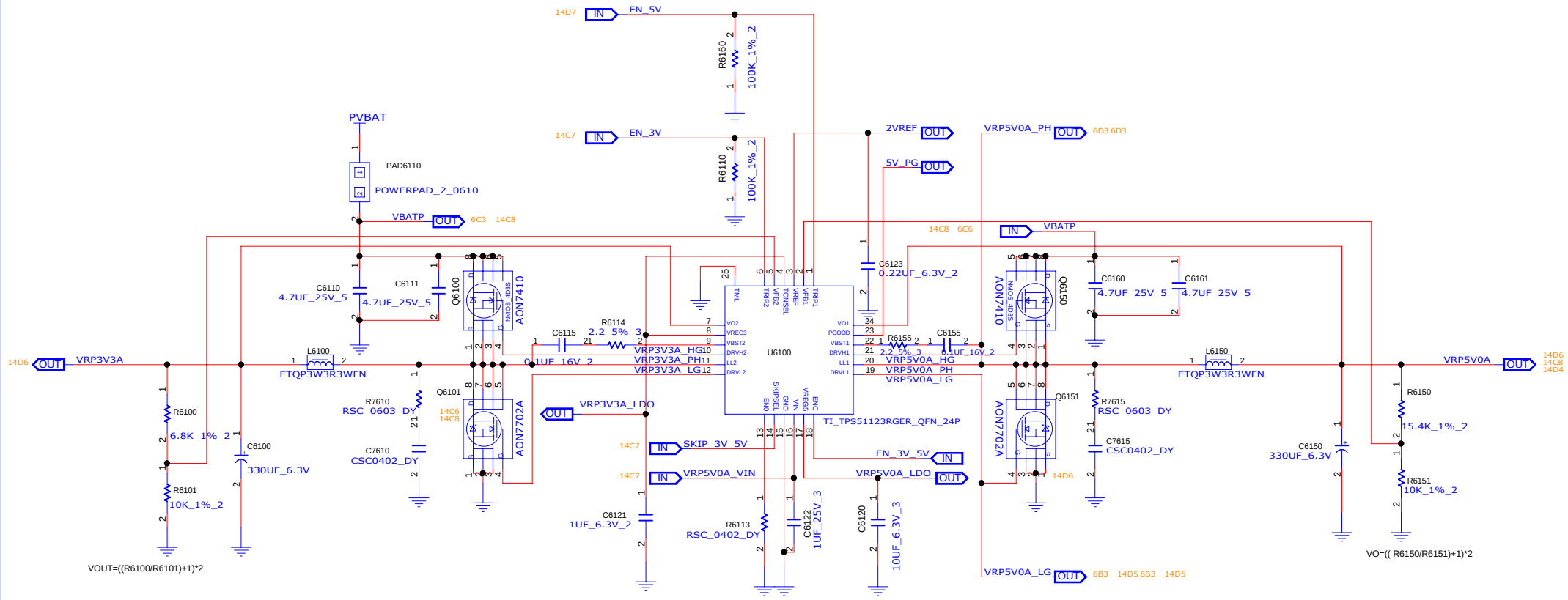

Dr-Bios.com

INVENTEC

TITLE
Dakar10ABGP
Block Diagram

SIZE	CODE	DOC.NUMBER	REV
A3	CS	1310xxxxx-0-0	X01

CHANGE by Parry Huang DATE 21-OCT-2002 SHEET 6 of 57

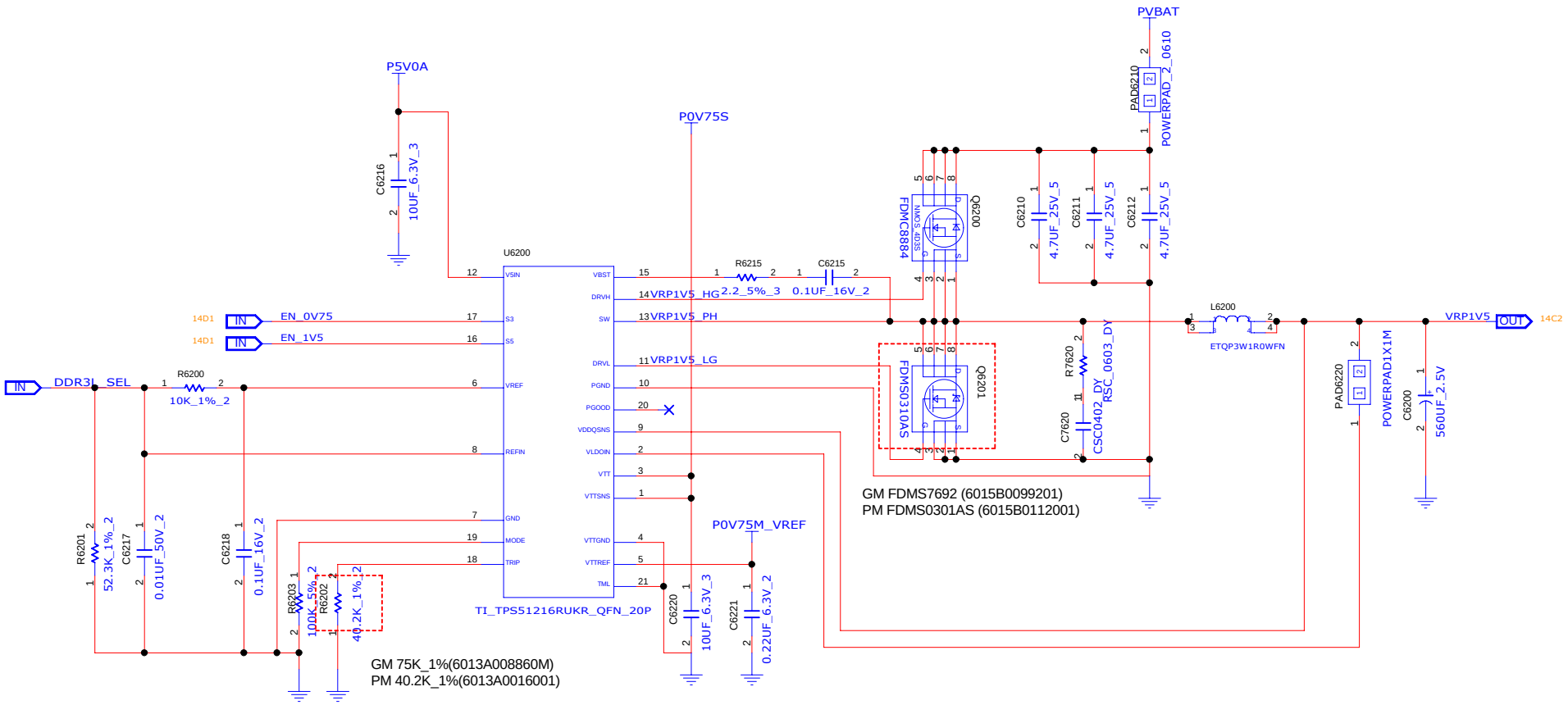

INVENTEC

TITLE
Dakar10ABGP
Block Diagram

SIZE	CODE	DOC.NUMBER	REV
A3	CS	1310xxxxx-0-0	X01

CHANGE by Parry Huang DATE 21-OCT-2002 SHEET 7 of 57

Dr-Bios.com

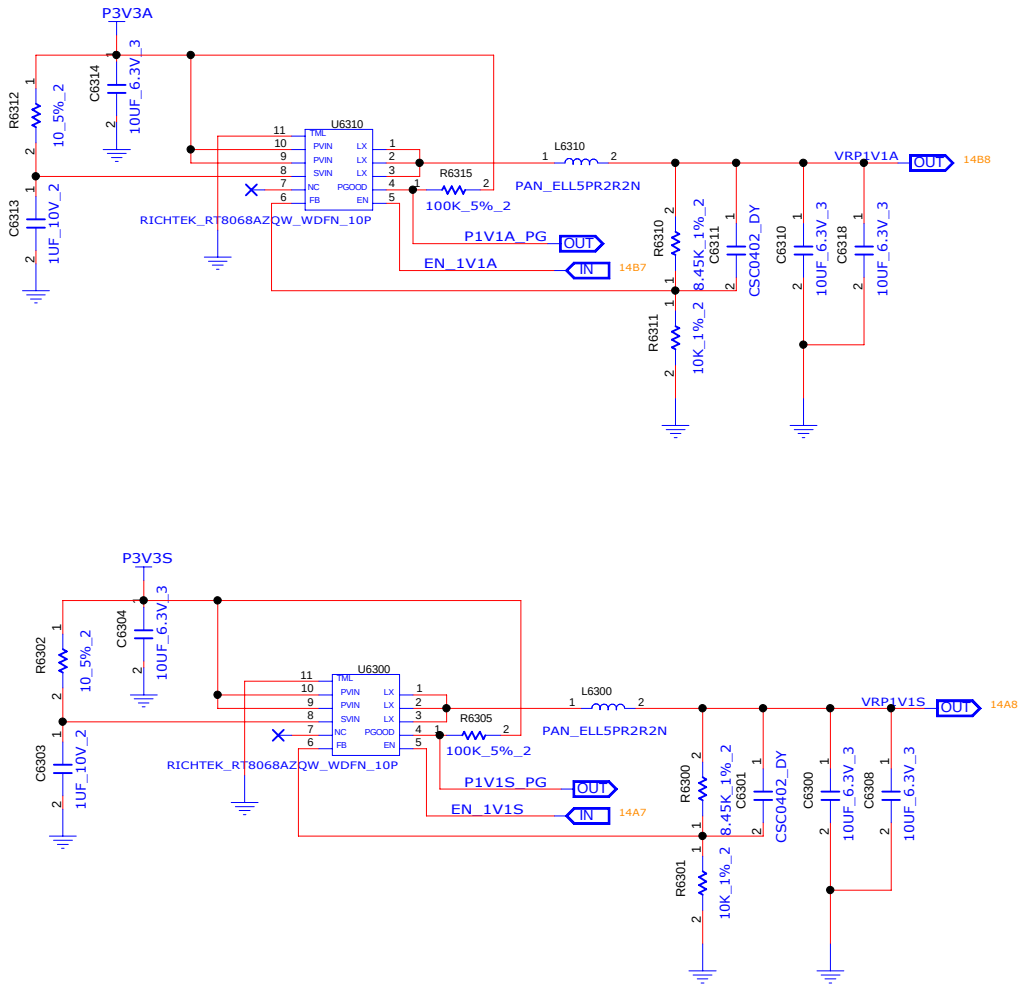

Dr-Bios.com

INVENTEC

TITLE
Dakar10ABGP
Block Diagram

SIZE	CODE	DOC.NUMBER	REV
A3	CS	1310xxxxx-0-0	X01

CHANGE by Parry Huang | DATE 21-OCT-2002 | SHEET 8 of 57

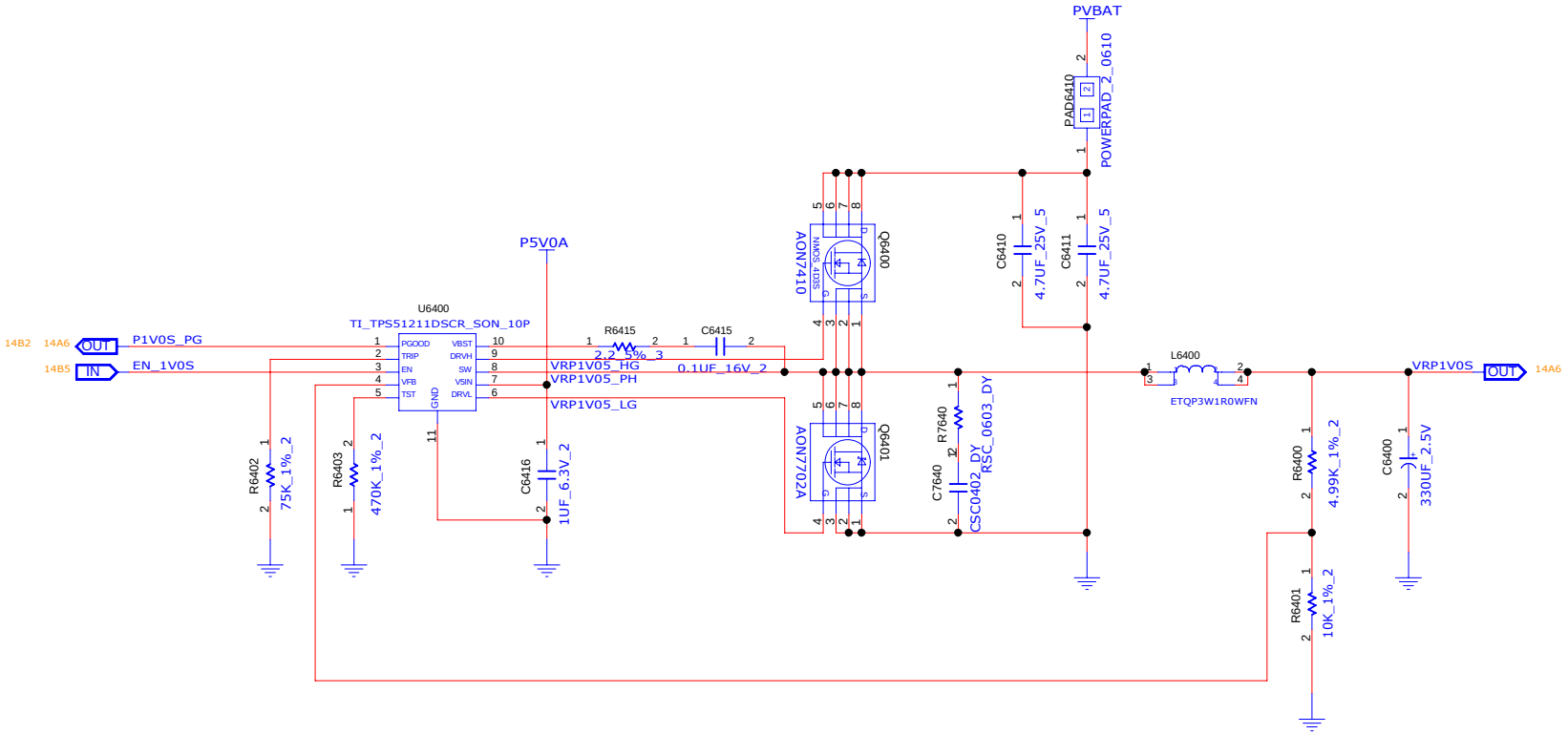

Dr-Bios.com

INVENTEC

TITLE
Dakar10ABGP
Block Diagram

SIZE	CODE	DOC.NUMBER	REV
A3	CS	1310xxxxx-0-0	X01

CHANGE by Parry Huang DATE 21-OCT-2002 SHEET 9 of 57

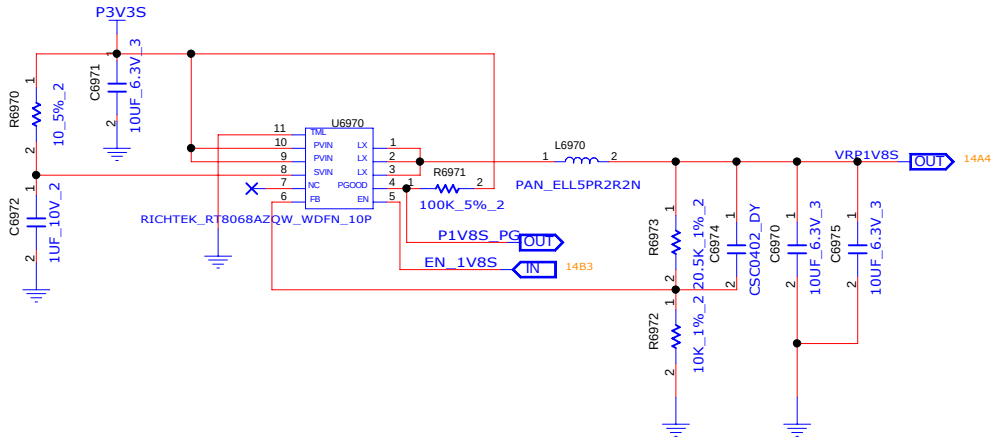

Dr-Bios.com

INVENTEC

TITLE
Dakar10ABGP
Block Diagram

SIZE	CODE	DOC.NUMBER	REV
A3	CS	1310xxxxx-0-0	X01

CHANGE by Parry Huang | DATE 21-OCT-2002 | SHEET 10 of 57

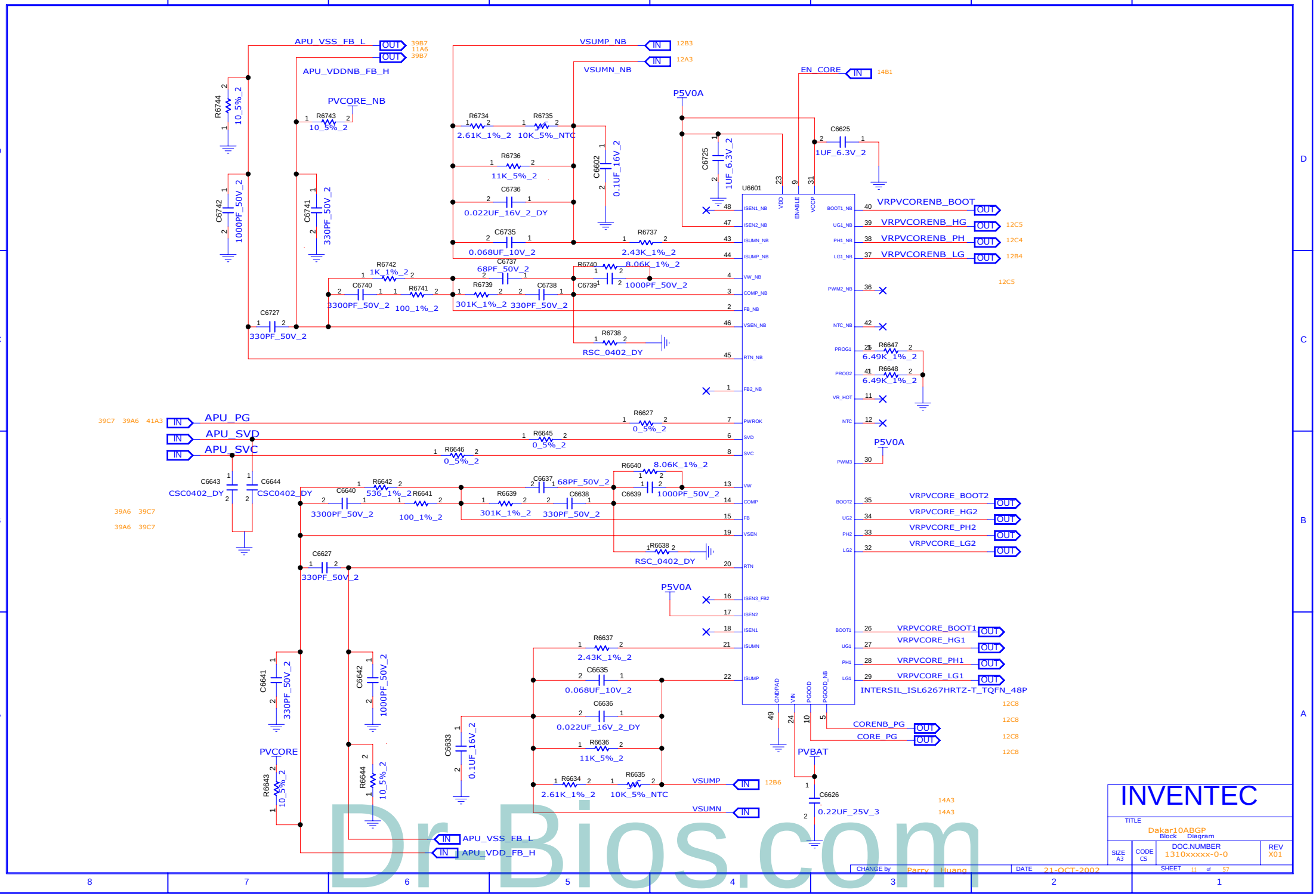
APU_VSS_FB_L
APU_VDDNB_FB_H
PVCORE_NB
VSUMP_NB
VSUMN_NB
EN_CORE
P5V0A
U6601
VRPVCORENB_BOOT
VRPVCORENB_HG
VRPVCORENB_PH
VRPVCORENB_LG
APU_PG
APU_SVD
APU_SVC
VRPVCORE_BOOT2
VRPVCORE_HG2
VRPVCORE_PH2
VRPVCORE_LG2
VRPVCORE_BOOT1
VRPVCORE_HG1
VRPVCORE_PH1
VRPVCORE_LG1
INTERSIL_ISL6267HRTZ-T_TQFN_48P
CORENB_PG
CORE_PG
PVBAT
PVCORE
VSUMP
VSUMN
APU_VSS_FB_L
APU_VDD_FB_H
INVENTEC
Dakar10ABGP
Block Diagram
DOC.NUMBER
1310xxxxx-0-0
REV
X01
SIZE
A3
CODE
CS
SHEET 11 of 57
CHANGE by Parry Huang
DATE 21-OCT-2002

Dr-Bios.com

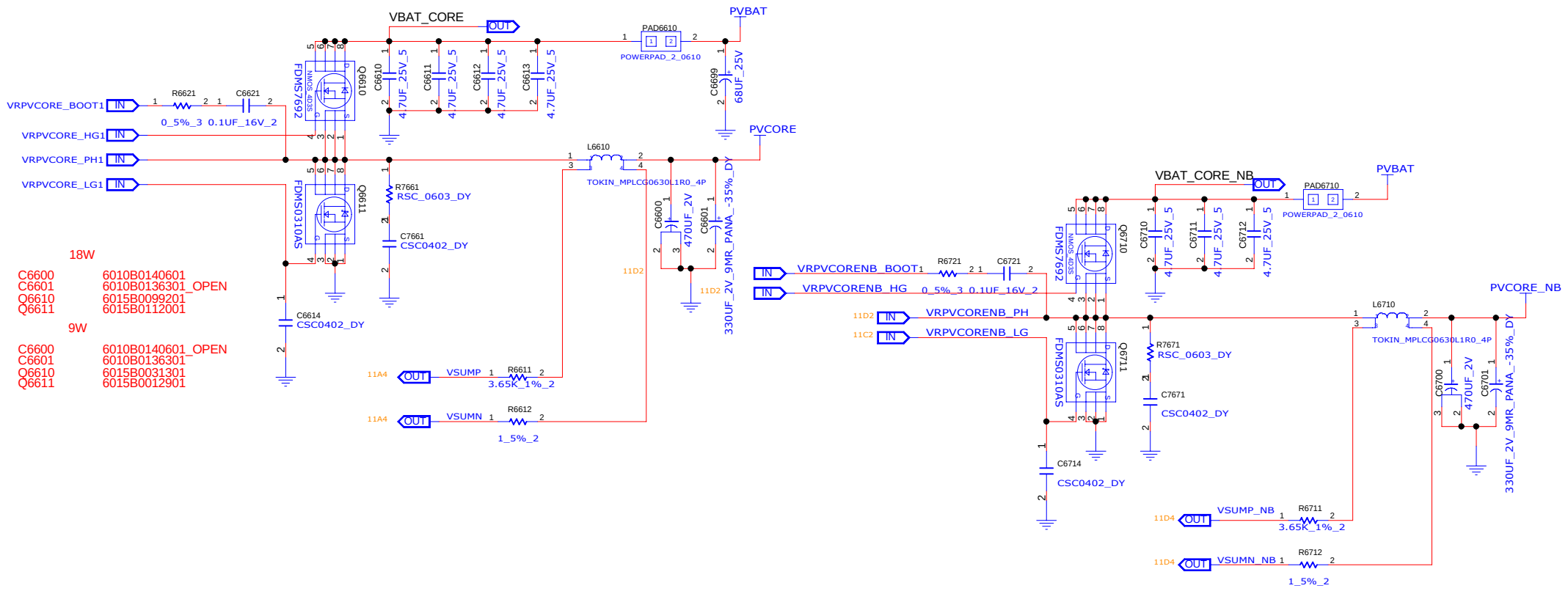

18W

C6600	6010B0140601
C6601	6010B0136301_OPEN
Q6610	6015B0099201
Q6611	6015B0112001

9W

C6600	6010B0140601_OPEN
C6601	6010B0136301
Q6610	6015B0031301
Q6611	6015B0012901

18W

C6700	6010B0140601
C6701	6010B0136301_OPEN
Q6710	6015B0099201-003
Q6711	6015B0112001

9W

C6700	6010B0140601_OPEN
C6701	6010B0136301
Q6710	6015B0031301
Q6711	6015B0012901

INVENTEC

TITLE: Dakar10ABGP Block Diagram

SIZE	CODE	DOC.NUMBER	REV
A3	CS	1310xxxxx-0-0	X01

CHANGE by Parry Huang DATE 21-OCT-2002 SHEET 12 of 57

Dr-Bios.com

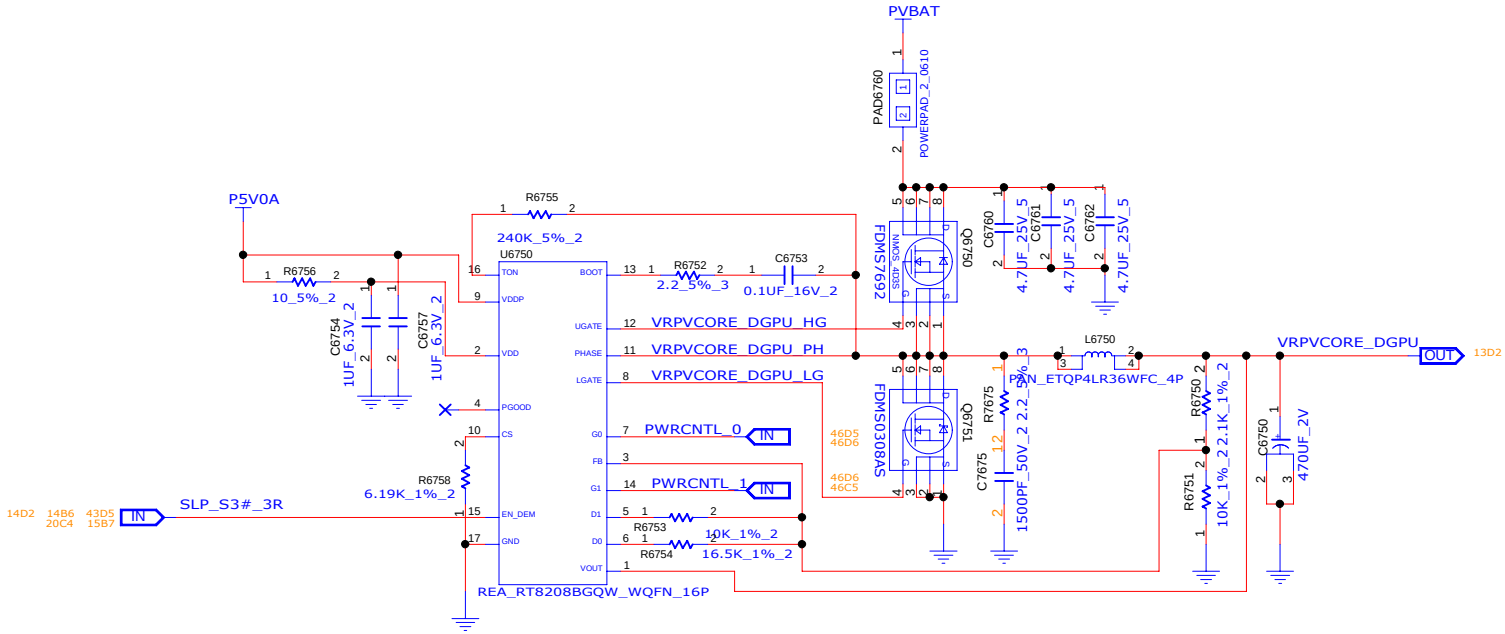

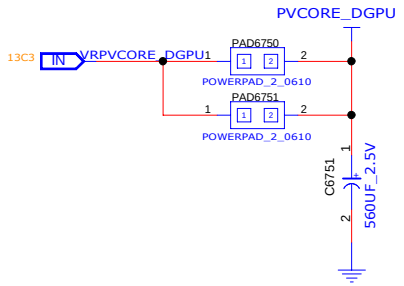

P.S. R6750(R1)R6751(R2)R6753(R3)R6754(R4)

R6750	R6751	R6753	R6754
2.1 K	10 K	10 K	16.5 K
G1	G0	期望	計算
0	0	1.15	1.18
0	1	1.05	1.08
1	0	1.0	1.015
1	1	0.9	0.915

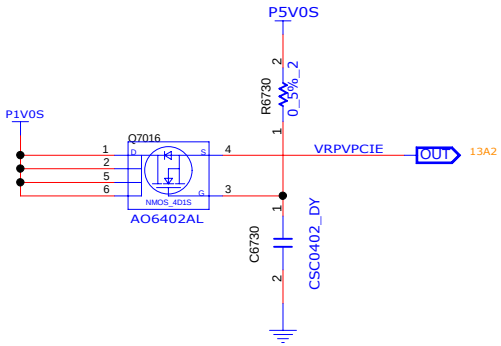

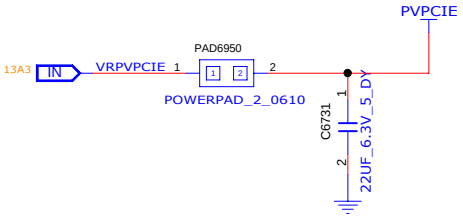

INVENTEC

TITLE Dakar10ABGP Block Diagram

SIZE	CODE	DOC.NUMBER	REV
A3	CS	1310xxxxx-0-0	X01

CHANGE by Parry Huang DATE 21-OCT-2002 SHEET 13 of 57

Dr-Bios.com

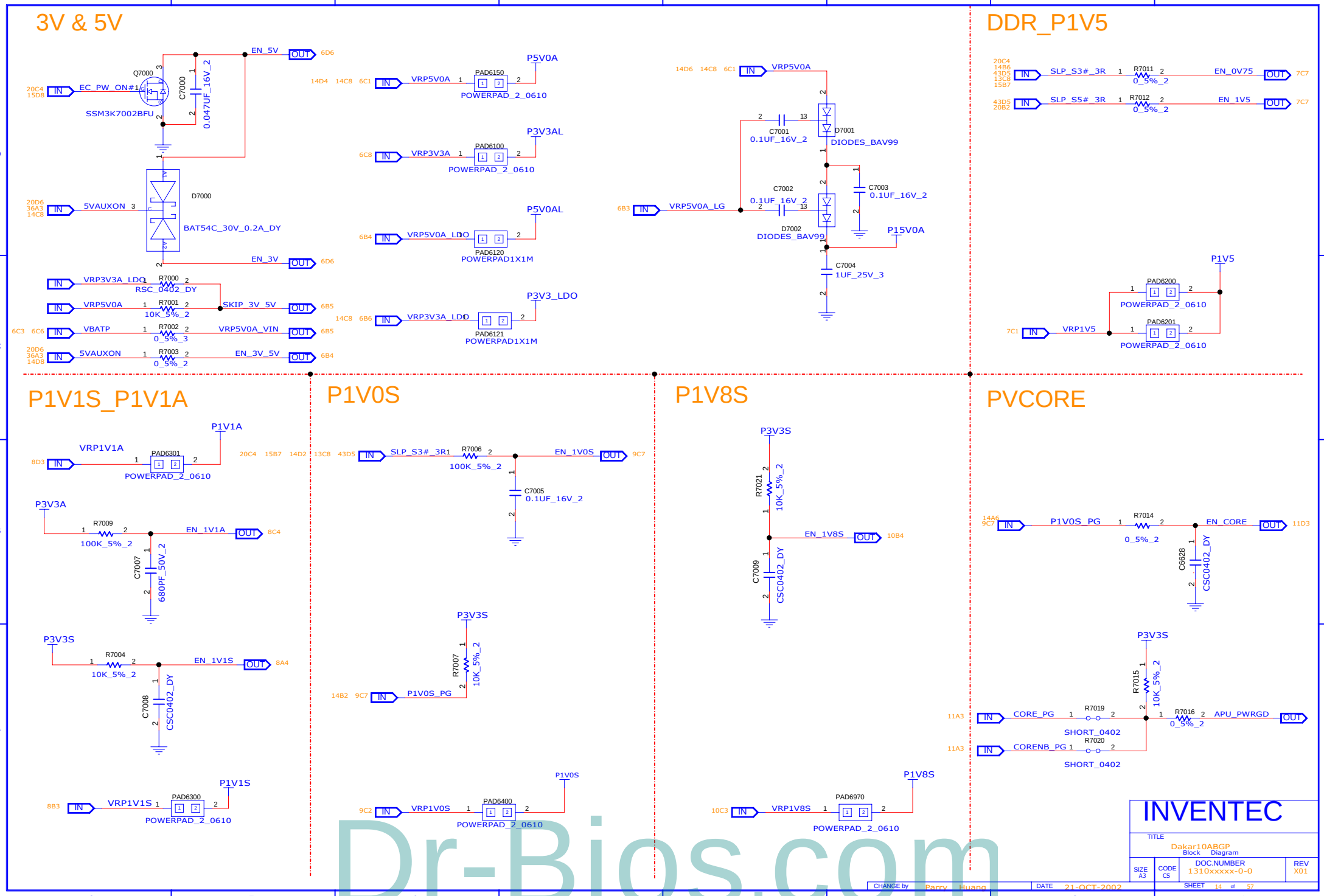
3V & 5V
EN_5V
OUT
6D6
Q7000
20C4
15D8
IN
EC_PW_ON#1
SSM3K7002BFU
C7000
0.047UF_16V_2
D7000
20D6
36A3
14C8
5VAUXON
BAT54C_30V_0.2A_DY
EN_3V
VRP3V3A_LDO
R7000
RSC_0402_DY
VRP5V0A
R7001
10K_5%_2
SKIP_3V_5V
6B5
6C3
6C6
VBATP
R7002
0_5%_3
VRP5V0A_VIN
20D6
36A3
14D8
5VAUXON
R7003
0_5%_2
EN_3V_5V
6B4
14D4
14C8
6C1
VRP5V0A
PAD6150
POWERPAD_2_0610
P5V0A
6C8
VRP3V3A
PAD6100
POWERPAD_2_0610
P3V3AL
6B4
VRP5V0A_LDO
PAD6120
POWERPAD1X1M
P5V0AL
14C8
6B6
VRP3V3A_LDO
PAD6121
POWERPAD1X1M
P3V3_LDO
14D6
14C8
6C1
VRP5V0A
C7001
0.1UF_16V_2
D7001
DIODES_BAV99
C7002
0.1UF_16V_2
6B3
VRP5V0A_LG
D7002
DIODES_BAV99
C7003
0.1UF_16V_2
P15V0A
C7004
1UF_25V_3
DDR_P1V5
20C4
14B6
43D5
13C8
15B7
SLP_S3#_3R
R7011
0_5%_2
EN_0V75
7C7
43D5
20B2
SLP_S5#_3R
R7012
0_5%_2
EN_1V5
7C7
P1V5
PAD6200
POWERPAD_2_0610
7C1
VRP1V5
PAD6201
POWERPAD_2_0610
P1V1S_P1V1A
P1V1A
VRP1V1A
8D3
PAD6301
POWERPAD_2_0610
20C4
15B7
14D2
13C8
43D5
SLP_S3#_3R1
R7006
100K_5%_2
EN_1V0S
9C7
C7005
0.1UF_16V_2
P3V3A
R7009
100K_5%_2
EN_1V1A
8C4
C7007
680PF_50V_2
P3V3S
R7004
10K_5%_2
EN_1V1S
8A4
C7008
CSC0402_DY
P1V1S
8B3
VRP1V1S
PAD6300
POWERPAD_2_0610
P1V0S
P3V3S
R7007
10K_5%_2
14B2
9C7
P1V0S_PG
P1V0S
9C2
VRP1V0S
PAD6400
POWERPAD_2_0610
P1V8S
P3V3S
R7021
10K_5%_2
EN_1V8S
10B4
C7009
CSC0402_DY
P1V8S
10C3
VRP1V8S
PAD6970
POWERPAD_2_0610
PVCORE
14A6
9C7
P1V0S_PG
R7014
0_5%_2
EN_CORE
11D3
C6628
CSC0402_DY
P3V3S
R7015
10K_5%_2
11A3
CORE_PG
R7019
SHORT_0402
R7016
0_5%_2
APU_PWRGD
11A3
CORENB_PG
R7020
SHORT_0402
INVENTEC
TITLE
Dakar10ABGP
Block Diagram
SIZE A3
CODE CS
DOC.NUMBER 1310xxxxx-0-0
REV X01
CHANGE by Parry Huang
DATE 21-OCT-2002
SHEET 14 of 57

Dr-Bios.com

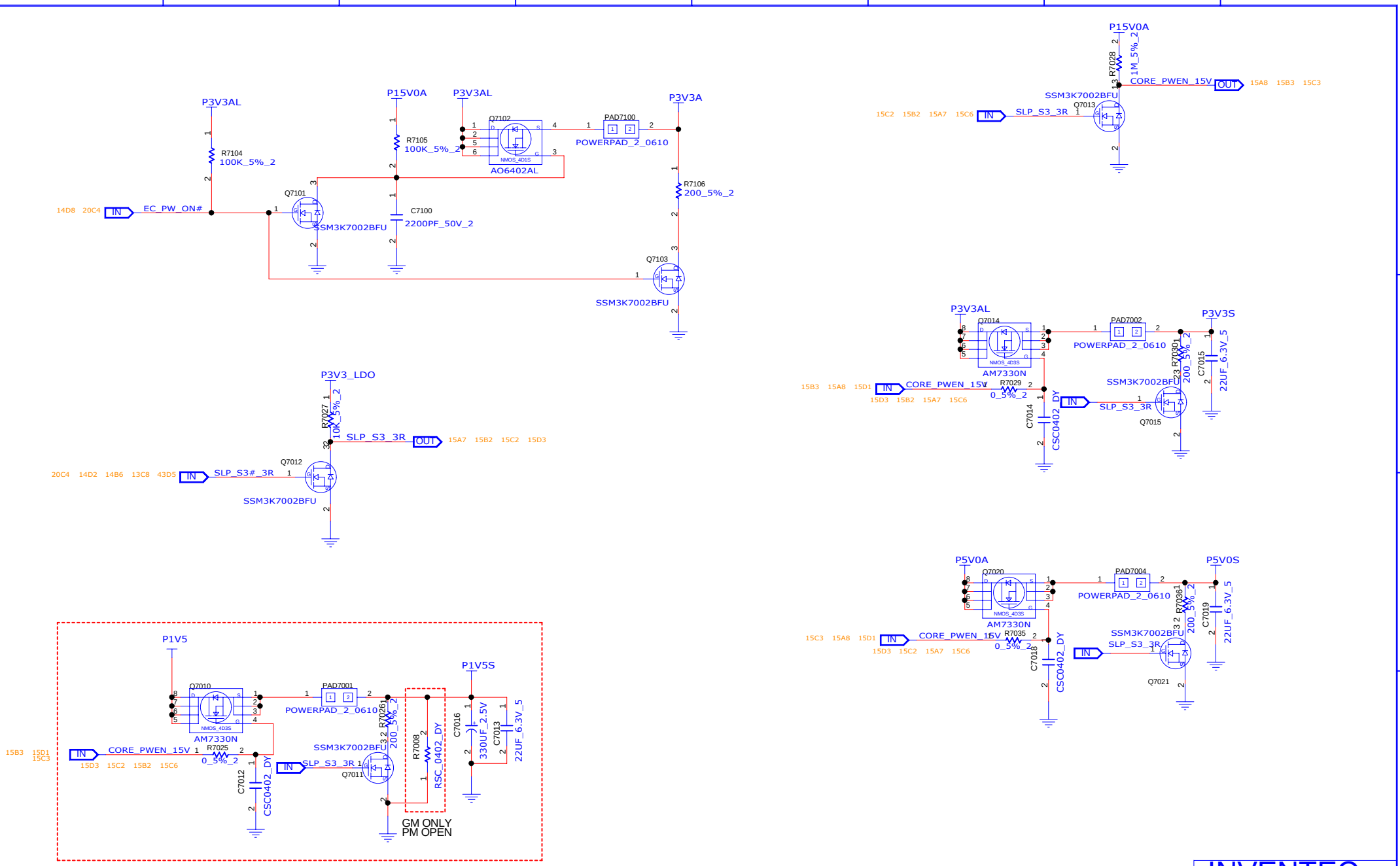

Dr-Bios.com

INVENTEC

TITLE
Dakar10ABGP
Block Diagram

SIZE	CODE	DOC.NUMBER	REV
A3	CS	1310xxxxx-0-0	X01

CHANGE by Parry Huang DATE 21-OCT-2002 SHEET 15 of 57

REFERENCE 0~49(PCB SCREW)

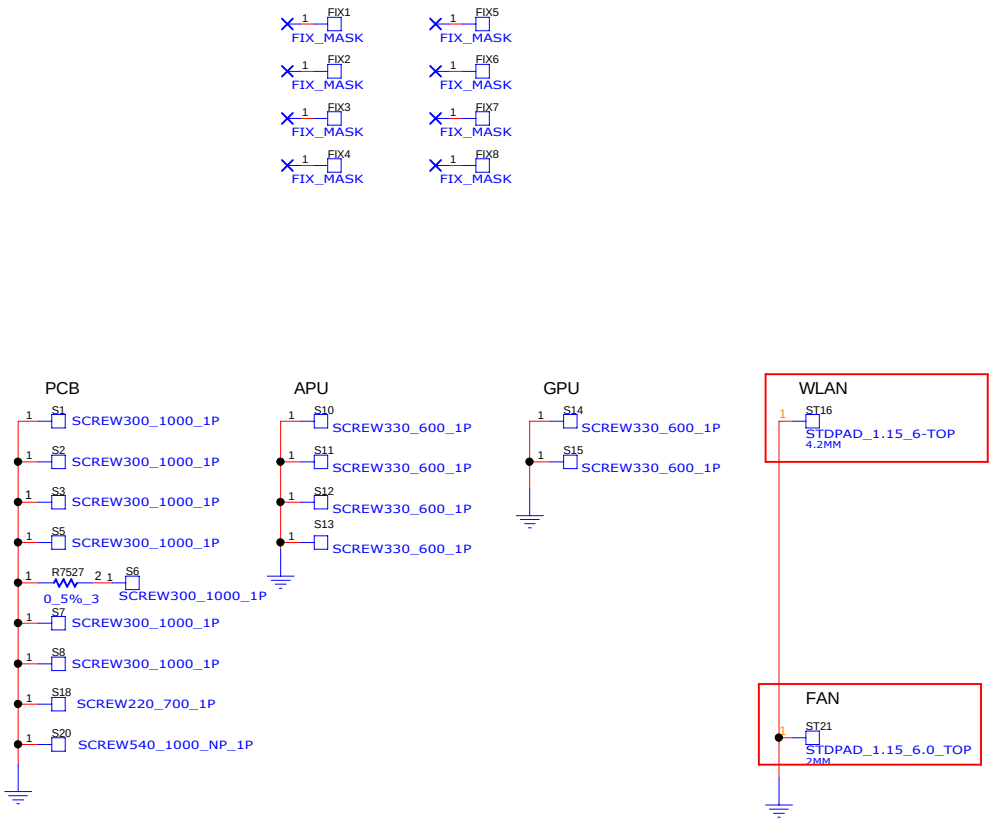

Dr-Bios.com

INVENTEC

TITLE
Dakar10ABGP
Block Diagram

SIZE	CODE	DOC.NUMBER	REV
A3	CS	1310xxxxx-0-0	X01

CHANGE by Parry Huang | DATE 21-OCT-2002 | SHEET 16 of 57

REFERENCE 50-99(HALL SENSOR)

HALL SENSOR

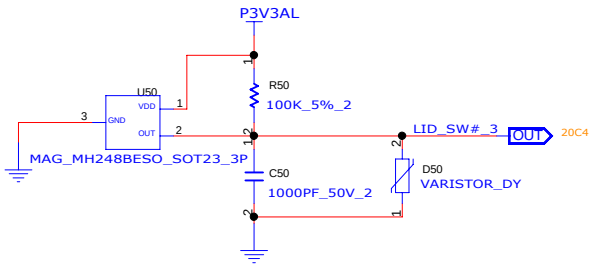

Dr-Bios.com

INVENTEC

TITLE
Dakar10ABGP
Block Diagram

SIZE	CODE	DOC.NUMBER	REV
A3	CS	1310xxxxx-0-0	X01

CHANGE by Parry Huang | DATE 21-OCT-2002 | SHEET 17 of 57

REFERENCE 100~199(LED)

POWER ON LED/SUSPEND LED

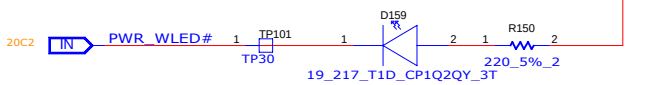

AC IN/BATTERY FULL LED

D152 BRIGHT:BOTH AC-ADAPTER IS PLUGGED IN AND BATTERY IS FULL CHARGED
D155 BRIGHT:WHILE CHARGING BATTERY FROM AC-ADAPTER
BLINK:LOW BATTERY

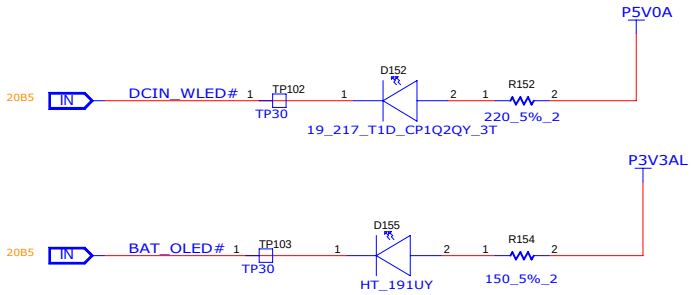

WIRELESS/WIMAX/3G/LTE LED

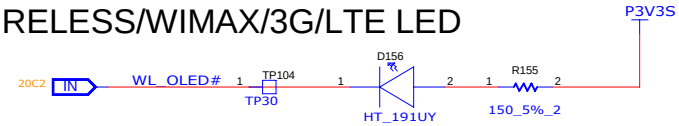

Dr-Bios.com

INVENTEC			
TITLE Dakar10ABGP Block Diagram			
SIZE A3	CODE CS	DOC.NUMBER 1310xxxxx-0-0	REV X01
CHANGE by Parry Huang	DATE 21-OCT-2002	SHEET 18 of 57	

REFERENCE 200~249(POWER CONN)
REFERENCE 250~299(KB/TP CONN)

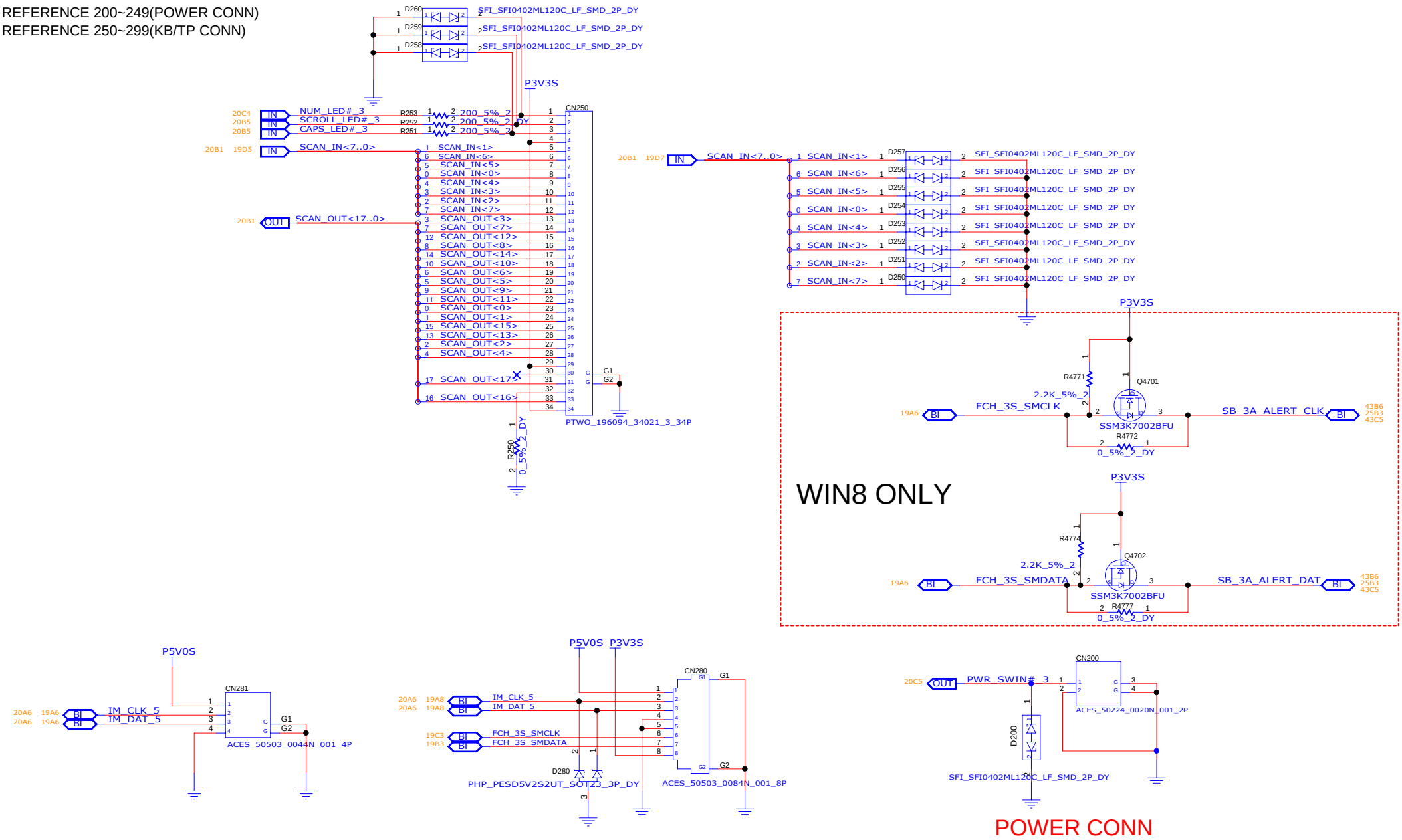

TOUCHPAD CONN

POWER CONN

Dr-Bios.com

INVENTEC

TITLE: Dakar10ABGP Block Diagram

SIZE	CODE	DOC.NUMBER	REV
A3	CS	1310xxxxx-0-0	X01

CHANGE by Parry Huang DATE 21-OCT-2002 SHEET 19 of 57

REFERENCE 300~389(KBC)

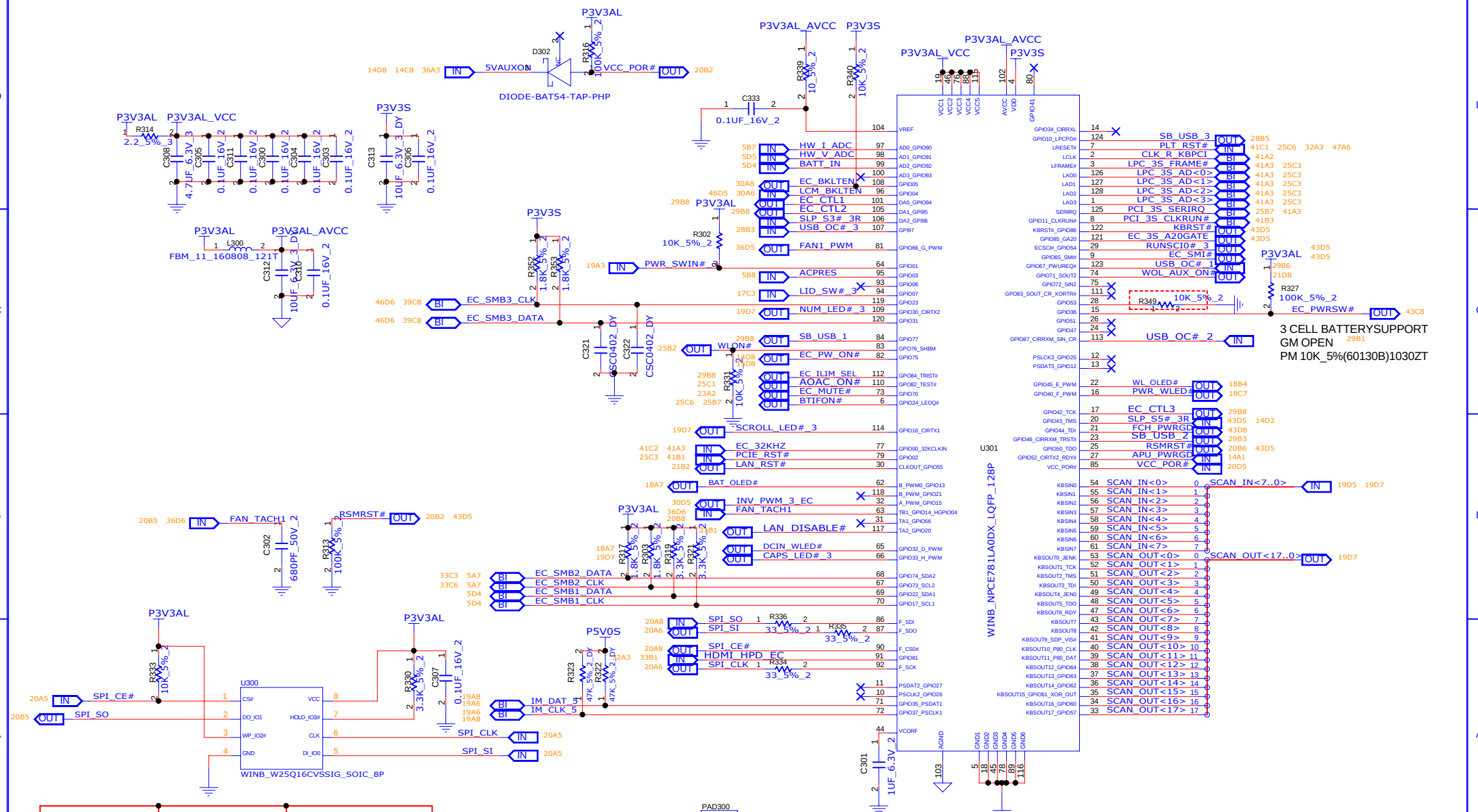

EC_SMB1	EC_SMB2	EC_SMB3
1.BATTERY	1.CHARGE	1.CPU THERMAL
	2.CEC	2.GPU THERMAL

Dr-Bios.com

INVENTEC

TITLE: Dakar10ABGP Block Diagram

SIZE	CODE	DOC.NUMBER	REV
A3	CS	1310xxxxx-0-0	X01

CHANGE by Parry Huang DATE 21-OCT-2002 SHEET 20 of 57

REFERENCE 400~499(LAN)

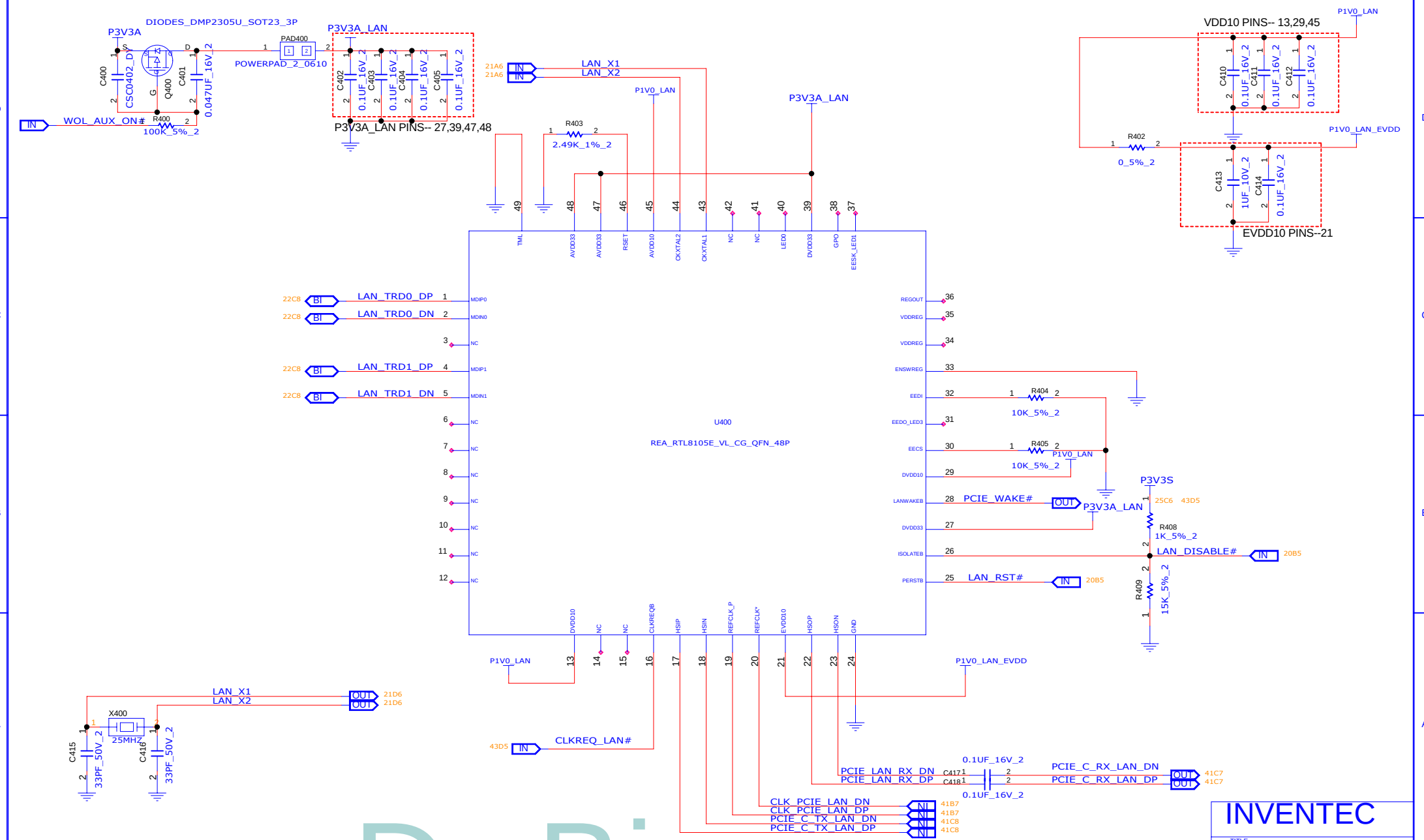

INVENTEC

TITLE: Dakar10ABGP Block Diagram

SIZE	CODE	DOC.NUMBER	REV
A3	CS	1310xxxxx-0-0	X01

CHANGE by Parry Huang DATE 21-OCT-2002 SHEET 21 of 57

Dr-Bios.com

REFERENCE 470~499(LAN)

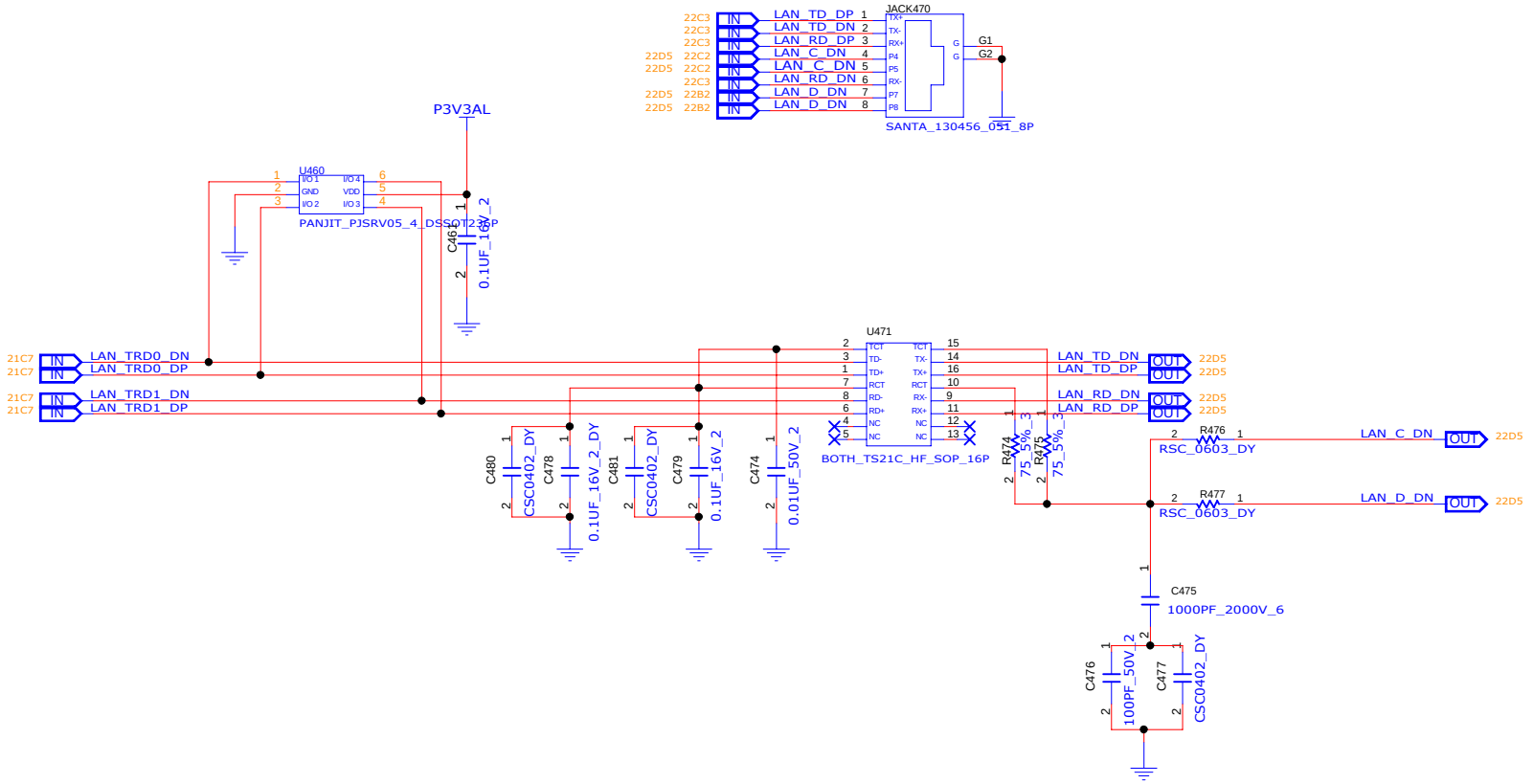

Dr-Bios.com

INVENTEC

TITLE
Dakar10ABGP
Block Diagram

SIZE	CODE	DOC.NUMBER	REV
A3	CS	1310xxxxx-0-0	X01

CHANGE by Parry Huang DATE 21-OCT-2002 SHEET 22 of 57

REFERENCE 500~549(AUDIO CODEC)

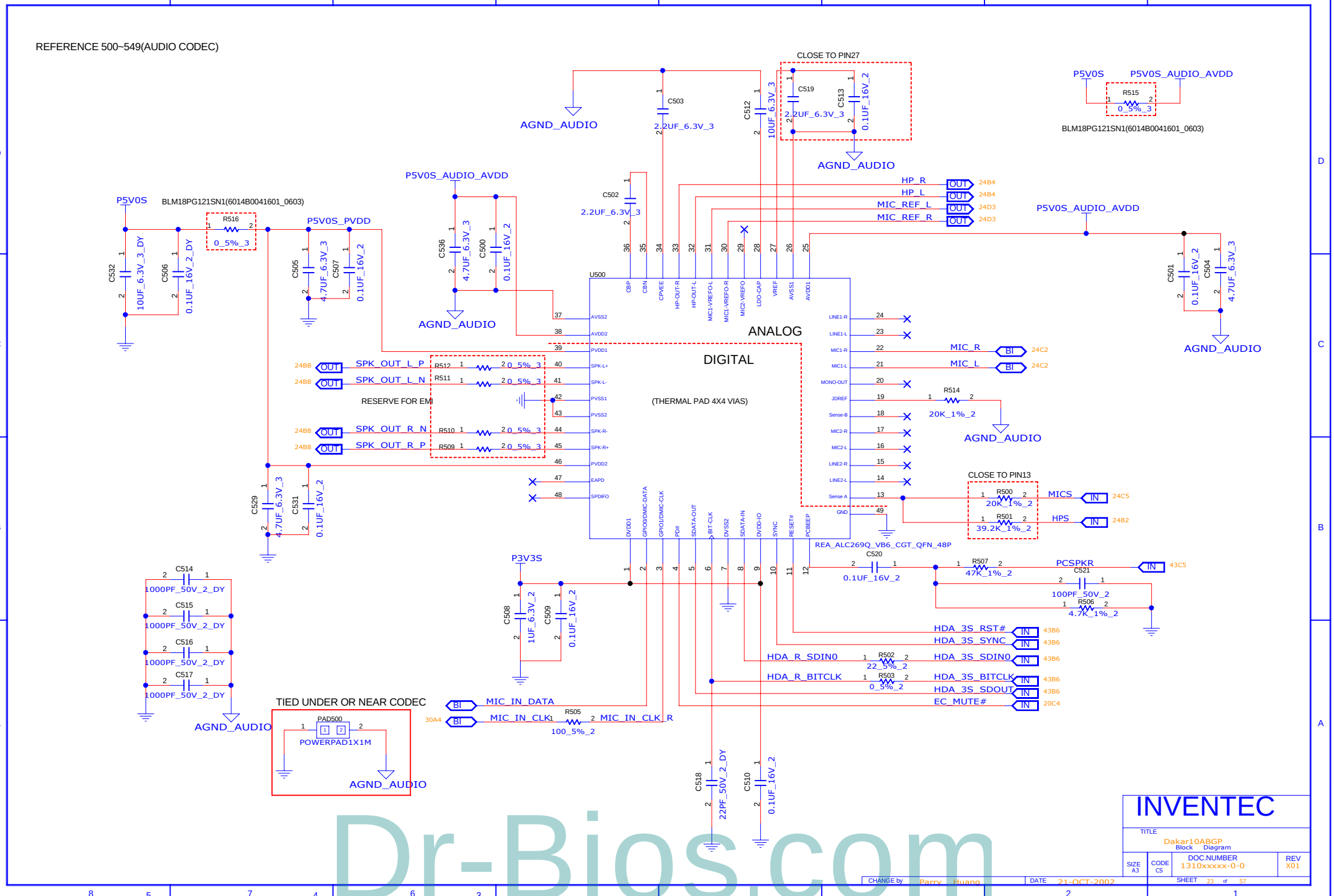

INVENTEC

TITLE: Dakar10ABGP Block Diagram

SIZE	CODE	DOC.NUMBER	REV
A3	CS	1310xxxxx-0-0	X01

CHANGE by Parry Huang DATE 21-OCT-2002 SHEET 23 of 57

Dr-Bios.com

REFERCE 600~649(JACK/MIC/SPEAKER)

AUDIO JACKS

MICPHONE

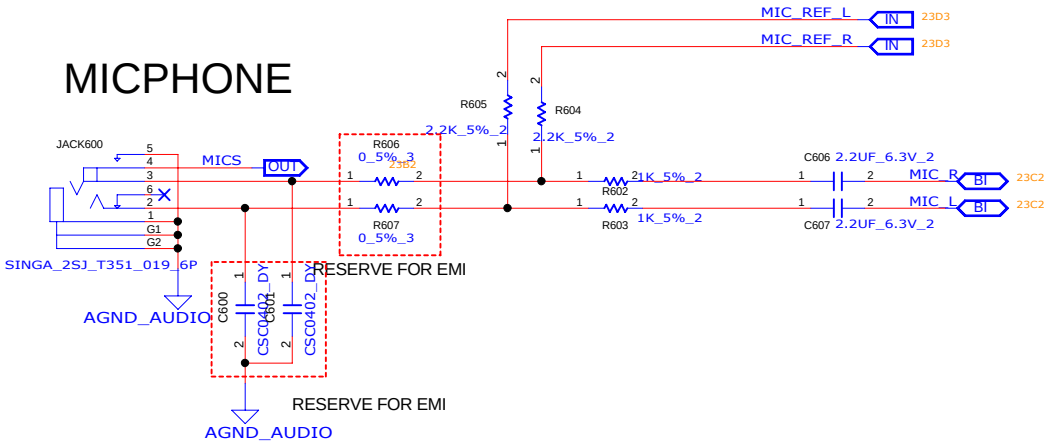

INTERNAL SPEAKERS

NOTE:SPK TRACE SHOULD 30~40 MILS WIDTH

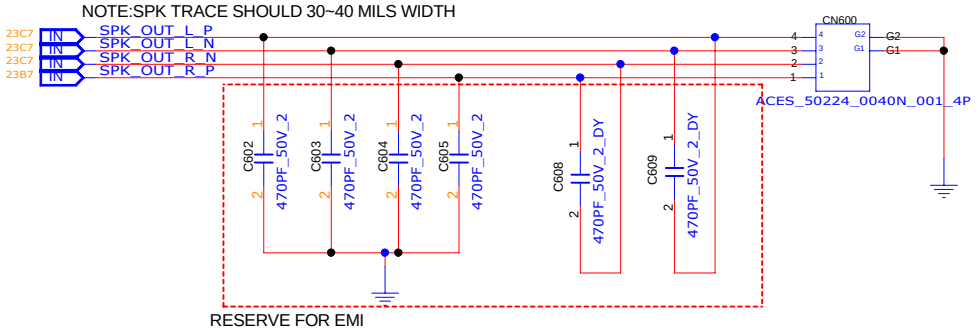

HEADPHONE

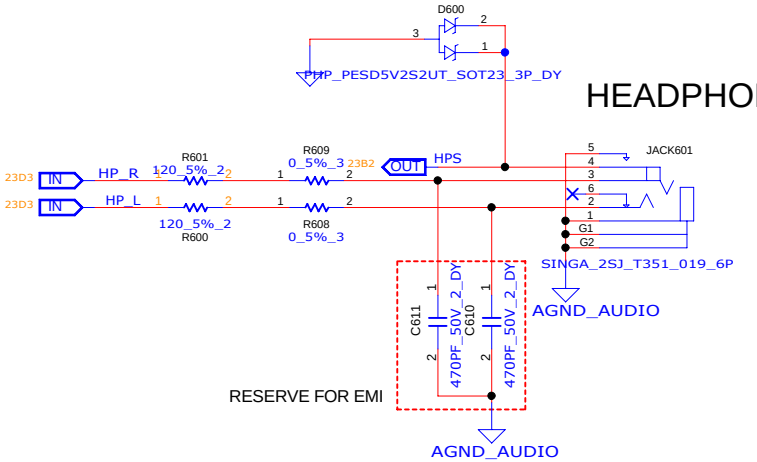

INVENTEC

TITLE
Dakar10ABGP
Block Diagram

SIZE	CODE	DOC.NUMBER	REV
A3	CS	1310xxxxx-0-0	X01

CHANGE by Parry Huang DATE 21-OCT-2002 SHEET 24 of 57

Dr-Bios.com

REFERENCE 1300~1349(WLAN)

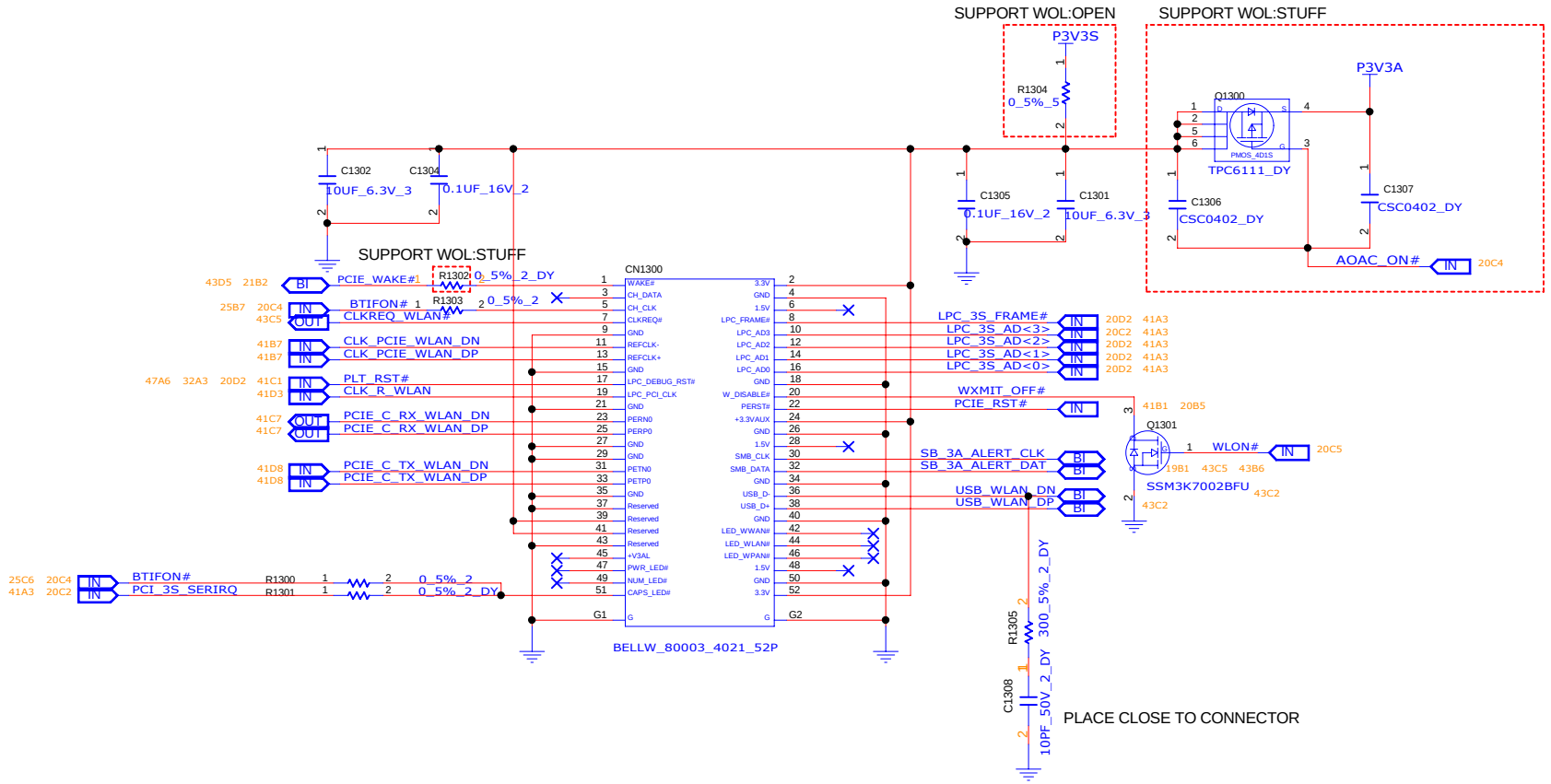

Dr-Bios.com

INVENTEC

TITLE
Dakar10ABGP
Block Diagram

SIZE	CODE	DOC.NUMBER	REV
A3	CS	1310xxxxx-0-0	X01

CHANGE by Parry Huang DATE 21-OCT-2002 SHEET 25 of 57

REFERNCE 900~999(CARDREADER)

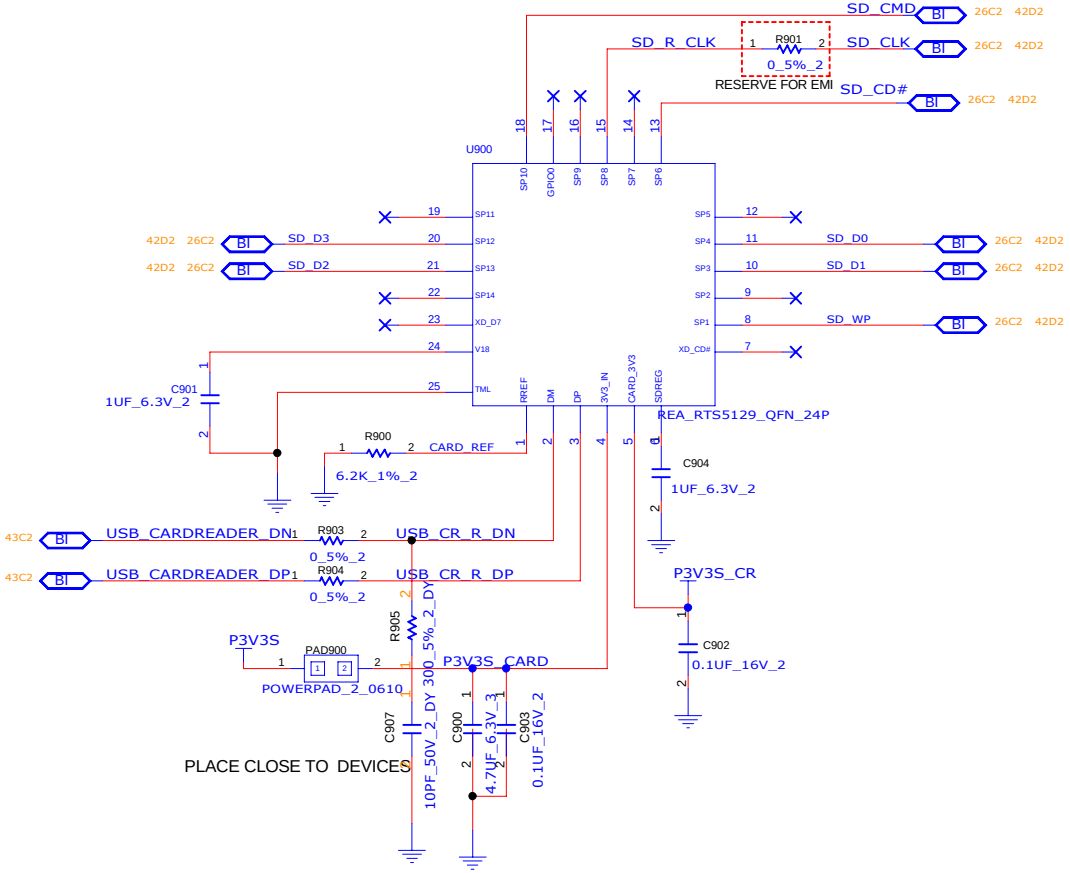

INTERNAL CARD READER

INTERNAL U901 START
EXTERNAL U901 OFF

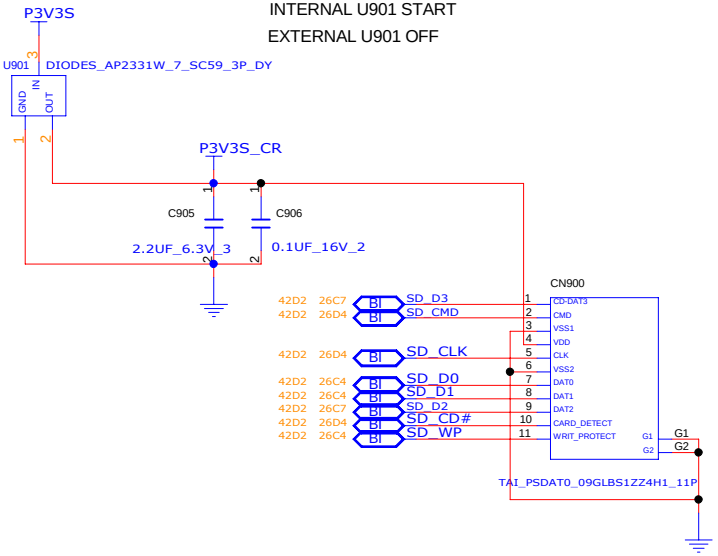

INVENTEC			
TITLE Dakar10ABGP Block Diagram			
SIZE A3	CODE CS	DOC.NUMBER 1310xxxxx-0-0	REV X01
CHANGE by Parry Huang	DATE 21-OCT-2002	SHEET 26 of 57	

Dr-Bios.com

REFERENCE 1700~1749(HDD)
REFERENCE 1750~1799(ODD)

SATA HDD

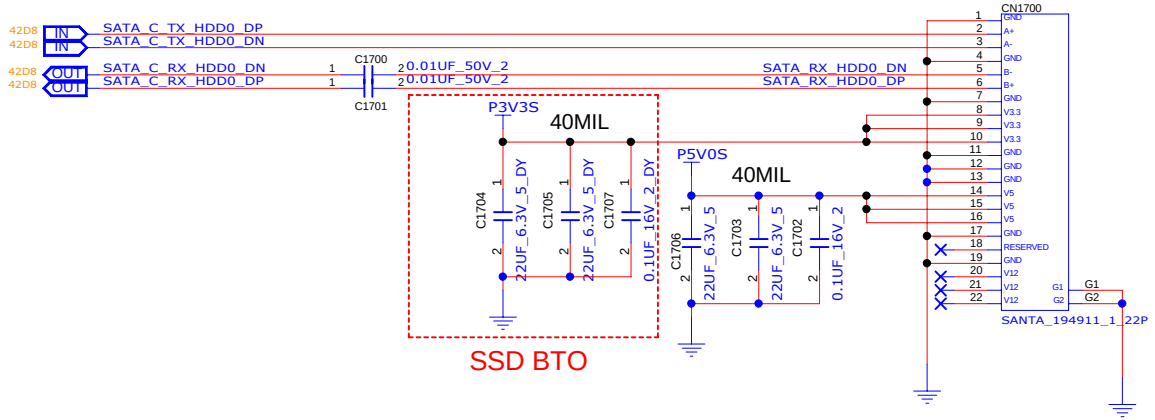

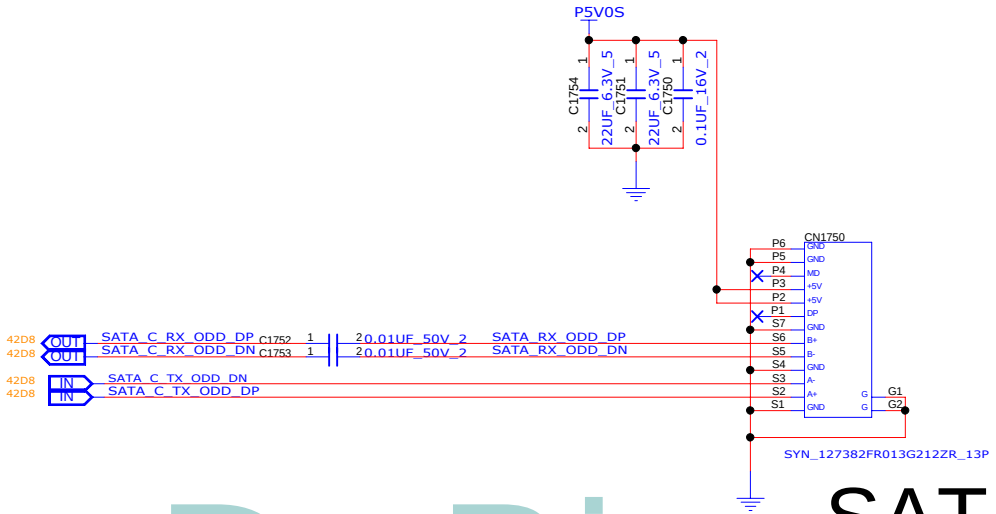

SATA ODD

Dr-Bios.com

INVENTEC

TITLE Dakar10ABGP Block Diagram

SIZE	CODE	DOC.NUMBER	REV
A3	CS	1310xxxxx-0-0	X01

CHANGE by Parry Huang DATE 21-OCT-2002 SHEET 27 of 57

REFERENCE 2000~2099(USB)

PLACEMENT LEFT SIDE

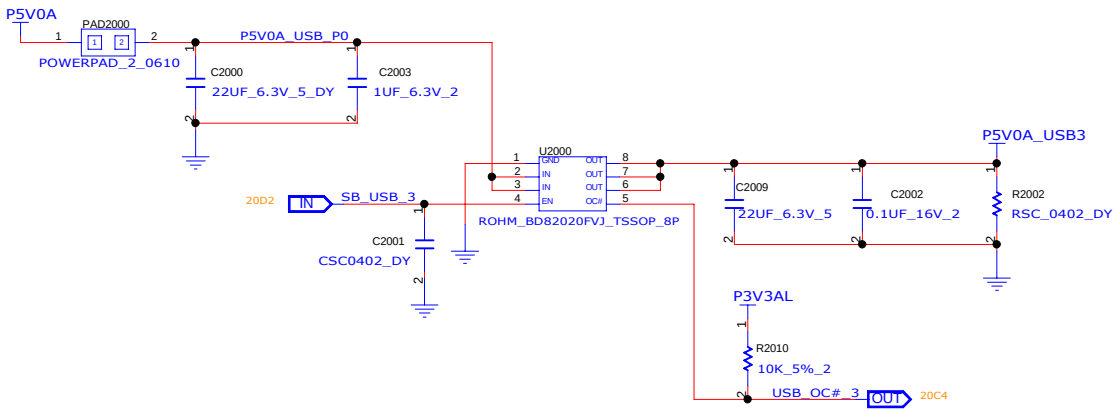

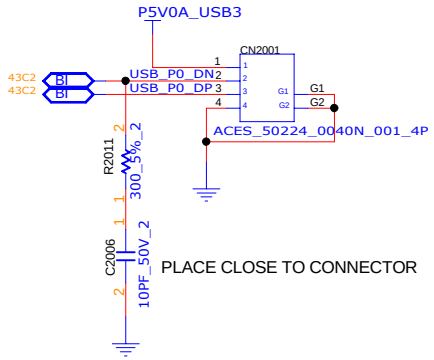

Dr-Bios.com

INVENTEC			
TITLE Dakar10ABGP Block Diagram			
SIZE A3	CODE CS	DOC.NUMBER 1310xxxxx-0-0	REV X01
CHANGE by Parry Huang	DATE 21-OCT-2002	SHEET 28 of 57	

USB 3.0 CONNECTOR

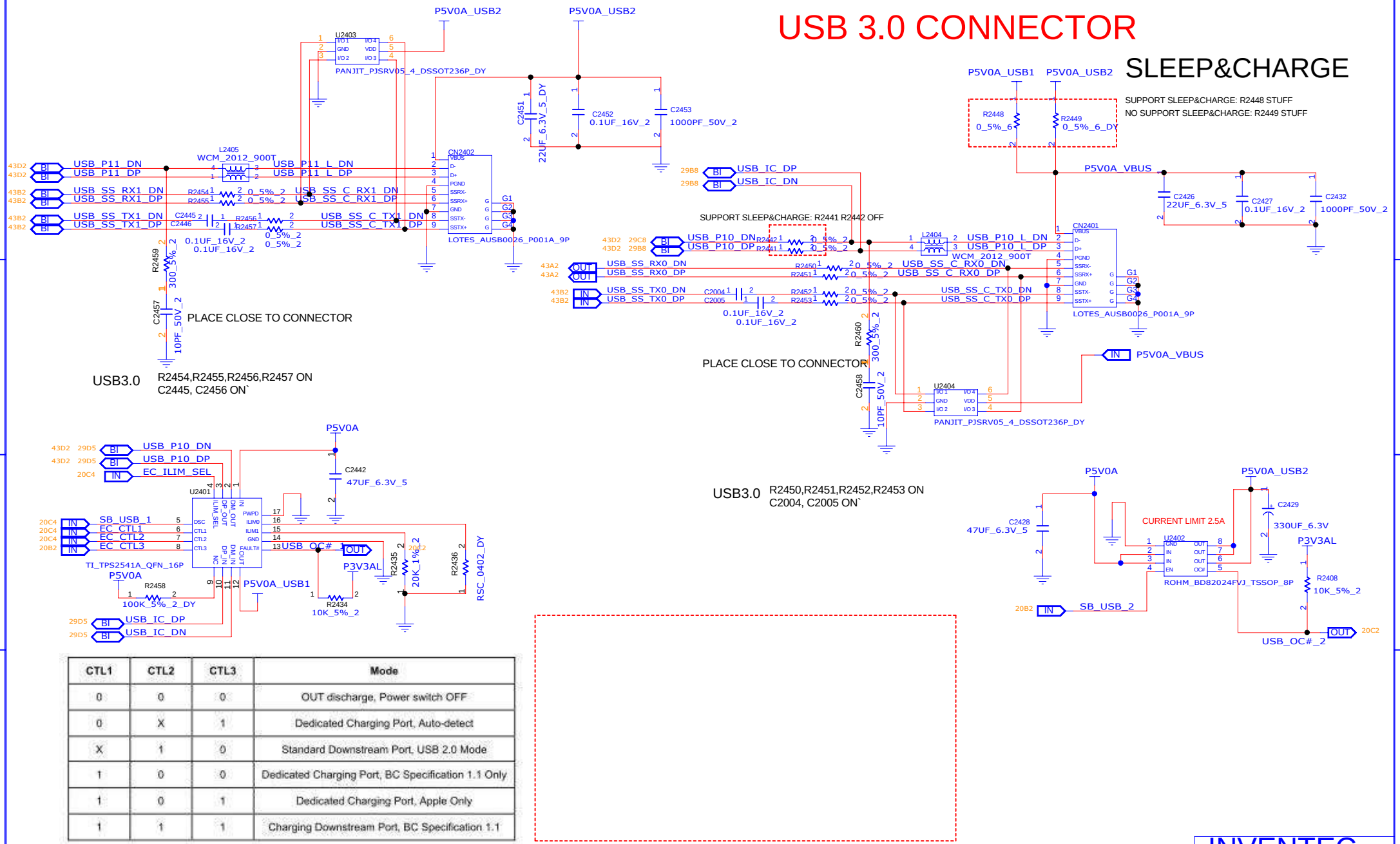

CTL1	CTL2	CTL3	Mode
0	0	0	OUT discharge, Power switch OFF
0	X	1	Dedicated Charging Port, Auto-detect
X	1	0	Standard Downstream Port, USB 2.0 Mode
1	0	0	Dedicated Charging Port, BC Specification 1.1 Only
1	0	1	Dedicated Charging Port, Apple Only
1	1	1	Charging Downstream Port, BC Specification 1.1

Table 2 – TPS2540 Control Truth Table

INVENTEC

TITLE Dakar10ABGP Block Diagram

SIZE A3 | CODE CS | DOC.NUMBER 1310xxxxx-0-0 | REV X01

CHANGE by Parry Huang | DATE 21-OCT-2002 | SHEET 29 of 57

Dr-Bios.com

REFFERENCE 3000~3049(LCM)

GM/PM CO-LAYOUT

47B6 IN LVDS_TXDL0_DN_GPU R5856 1 2 0_5%_2_DY
47B6 IN LVDS_TXDL0_DP_GPU R5854 1 2 0_5%_2_DY
47B6 IN LVDS_TXDL1_DN_GPU R5857 1 2 0_5%_2_DY
47B6 IN LVDS_TXDL1_DP_GPU R5855 1 2 0_5%_2_DY
47B6 IN LVDS_TXDL2_DN_GPU R5852 1 2 0_5%_2_DY
47B6 IN LVDS_TXDL2_DP_GPU R5850 1 2 0_5%_2_DY
47B6 IN LVDS_TXCL_DN_GPU R5853 1 2 0_5%_2_DY
47B6 IN LVDS_TXCL_DP_GPU R5851 1 2 0_5%_2_DY
39D7 IN LVDS_TXDL0_DN_APU R5868 1 2 0_5%_2 LVDS_TXDL0_DN OUT 30B4
39D7 IN LVDS_TXDL0_DP_APU R5866 1 2 0_5%_2 LVDS_TXDL0_DP OUT 30B4
39D7 IN LVDS_TXDL1_DN_APU R5869 1 2 0_5%_2 LVDS_TXDL1_DN OUT 30A4
39D7 IN LVDS_TXDL1_DP_APU R5867 1 2 0_5%_2 LVDS_TXDL1_DP OUT 30A4
39D7 IN LVDS_TXDL2_DN_APU R5864 1 2 0_5%_2 LVDS_TXDL2_DN OUT 30A4
39D7 IN LVDS_TXDL2_DP_APU R5860 1 2 0_5%_2 LVDS_TXDL2_DP OUT 30A4
39C7 IN LVDS_TXCL_DN_APU R5865 1 2 0_5%_2 LVDS_TXCL_DN OUT 30A4
39C7 IN LVDS_TXCL_DP_APU R5861 1 2 0_5%_2 LVDS_TXCL_DP OUT 30A4
39D3 BI LCM_DDCPCLK_APU R5844 1 2 100_5%_2 LCM_DDCPCLK BI 30B5 46D6
39D3 BI LCM_DDCPDATA_APU R5810 1 2 100_5%_2 LCM_DDCPDATA BI 30B5 46D6

39D2 IN INV_PWM_3_APU R5863 1 2 RSC_0402_DY
20B5 IN INV_PWM_3_EC R5862 1 2 100_5%_2
47C6 IN INV_PWM_3_GPU R5044 1 2 RSC_0402_DY
INV_PWM_3 OUT 30A4
R3012 10K_5%_2
C3008 1000PF_50V_2

R3012 APU100K/GPU10K
10K:60130B1030ZT
100K:60130B1040ZT

10K:60130B1030ZT
100K:60130B1040ZT

P3V3S
R3000 47K_5%_2
R3001 470K_5%_2
Q3001 SSM3K7002BFU
C3000 0.01UF_50V_2
DIODES_DMP2305U_SOT23_3P
Q3000
C3003 680PF_50V_2
R3004 100_5%_2
Q3002 SSM3K7002BFU
P3V3S_LVDS1
PAD3003 POWERPAD_2_0610
C3002 10UF_6.3V_3
C3001 0.1UF_16V_2
P3V3S_LVDS2

39D2 IN LCM_VDDEN_APU R5870 1 2 0_5%_2
47C6 IN LCM_VDDEN
R3010 10K_5%_2

R3010 APU100K/GPU10K
10K:60130B1030ZT
100K:60130B1040ZT

P3V3S
R3002 4.7K_5%_2
R3003 4.7K_5%_2
P3V3S
C3004 0.1UF_16V_2

CN3000
ACES_50203_03001_001_30P

46D6 30C6 BI LCM_DDCPCLK
46D6 30C6 BI LCM_DDCPDATA
30D6 IN LVDS_TXDL0_DN
30D6 IN LVDS_TXDL0_DP
30C6 IN LVDS_TXDL1_DN
30C6 IN LVDS_TXDL1_DP
30C6 IN LVDS_TXDL2_DN
30C6 IN LVDS_TXDL2_DP
30C6 IN LVDS_TXCL_DN
30C6 IN LVDS_TXCL_DP
30D3 IN INV_PWM_3
30A6 IN LVDS_BKLTEN

20D4 IN EC_BKLTEN R3013 1 2 100_5%_2 LVDS_BKLTEN OUT 30A4
R3007 100K_5%_2
C3007 CSC0402_DY

P3V3S
43D2 BI USB_CAM_DN
43D2 BI USB_CAM_DP
C3018 0.1UF_16V_2
PVBAT
R3005 300_5%_2
C3005 10PF_50V_2
PAD3001 POWERPAD_2_0610
PVBAT_LCD
23A6 OUT MIC_IN_CLK
23A6 BI MIC_IN_DATA 1 2 MIC_IN_DATA_R
R3011 100_5%_2
C3010 4.7UF_25V_5
C3009 0.1UF_25V_2
PLACE CLOSE TO CONNECTOR
G1
G2

39D2 IN LCM_BKLTEN_APU R5871 1 2 0_5%_2 LCM_BKLTEN OUT 46D5 20D4
R3009 10K_5%_2

R3009 APU100K/GPU10K
10K:60130B1030ZT
100K:60130B1040ZT

Dr-Bios.com

INVENTEC

TITLE Dakar10ABGP Block Diagram

SIZE	CODE	DOC.NUMBER	REV
A3	CS	1310xxxxx-0-0	X01

CHANGE by Parry Huang DATE 21-OCT-2002 SHEET 30 of 57

REFERENCE 3050~3099(CRT)

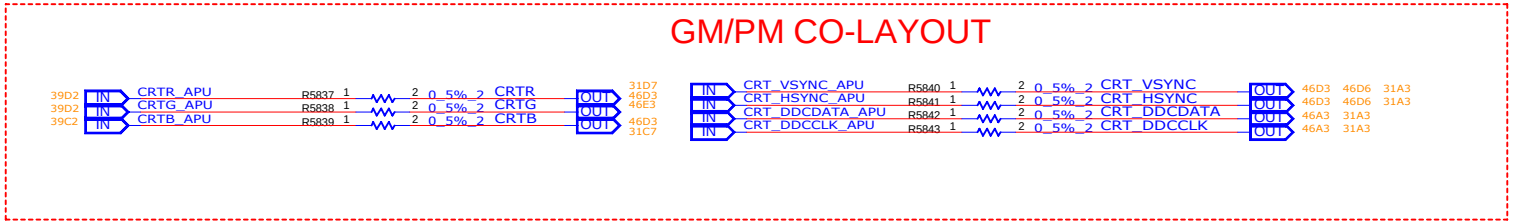

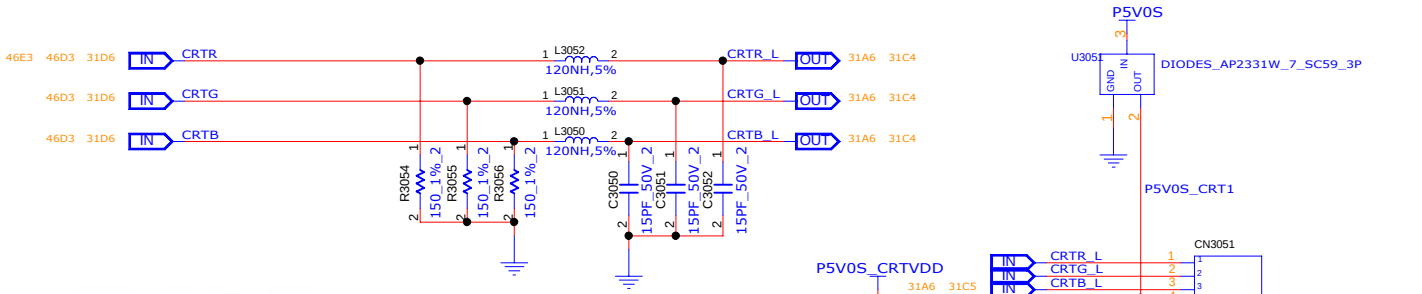

Level-shift PU values

	3 V	5 V
APU	4.7K_5% 60130B4720ZT	4.7K_5% 60130B4720ZT
GPU	10K_5% 60130B1030ZT	2K_5% 60130B2020ZT

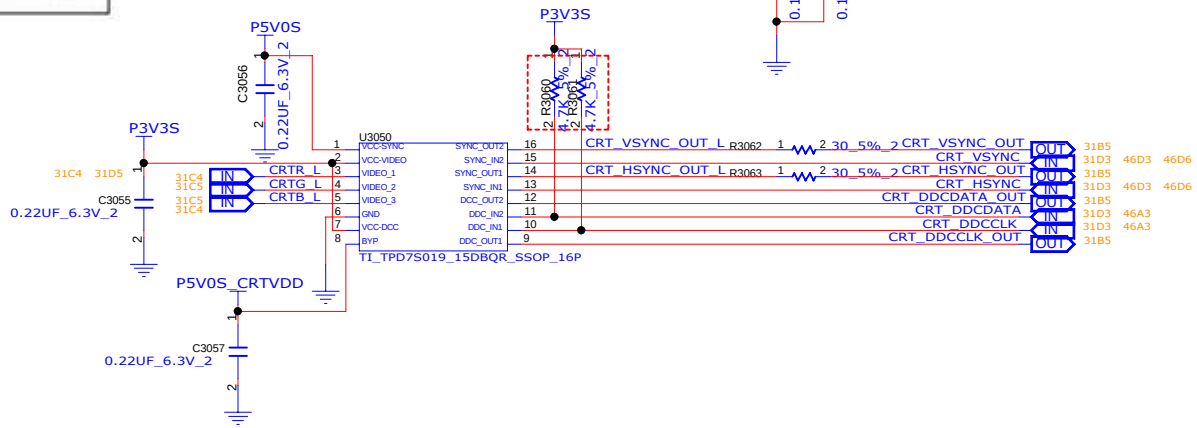

INVENTEC

TITLE Dakar10ABGP Block Diagram

SIZE	CODE	DOC.NUMBER	REV
A3	CS	1310xxxxx-0-0	X01

CHANGE by Parry Huang DATE 21-OCT-2002 SHEET 31 of 57

Dr-Bios.com

REFERENCE 3150~3199(HDMI)

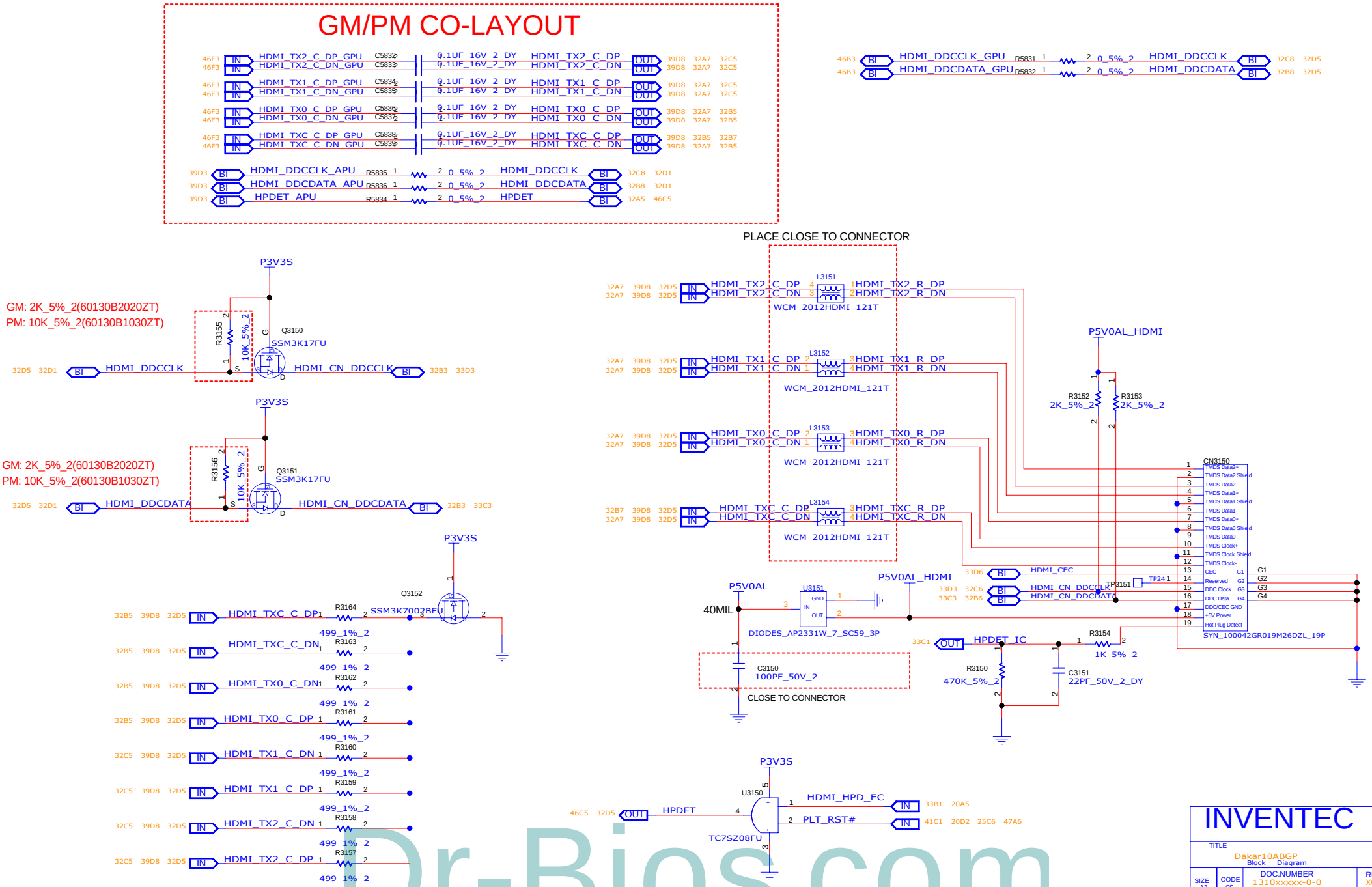

Dr-Bios.com

INVENTEC

TITLE: Dakar10ABGP Block Diagram

SIZE	CODE	DOC.NUMBER	REV
A3	CS	1310xxxxx-0-0	X01

CHANGE by Parry Huang DATE 21-OCT-2002 SHEET 32 of 57

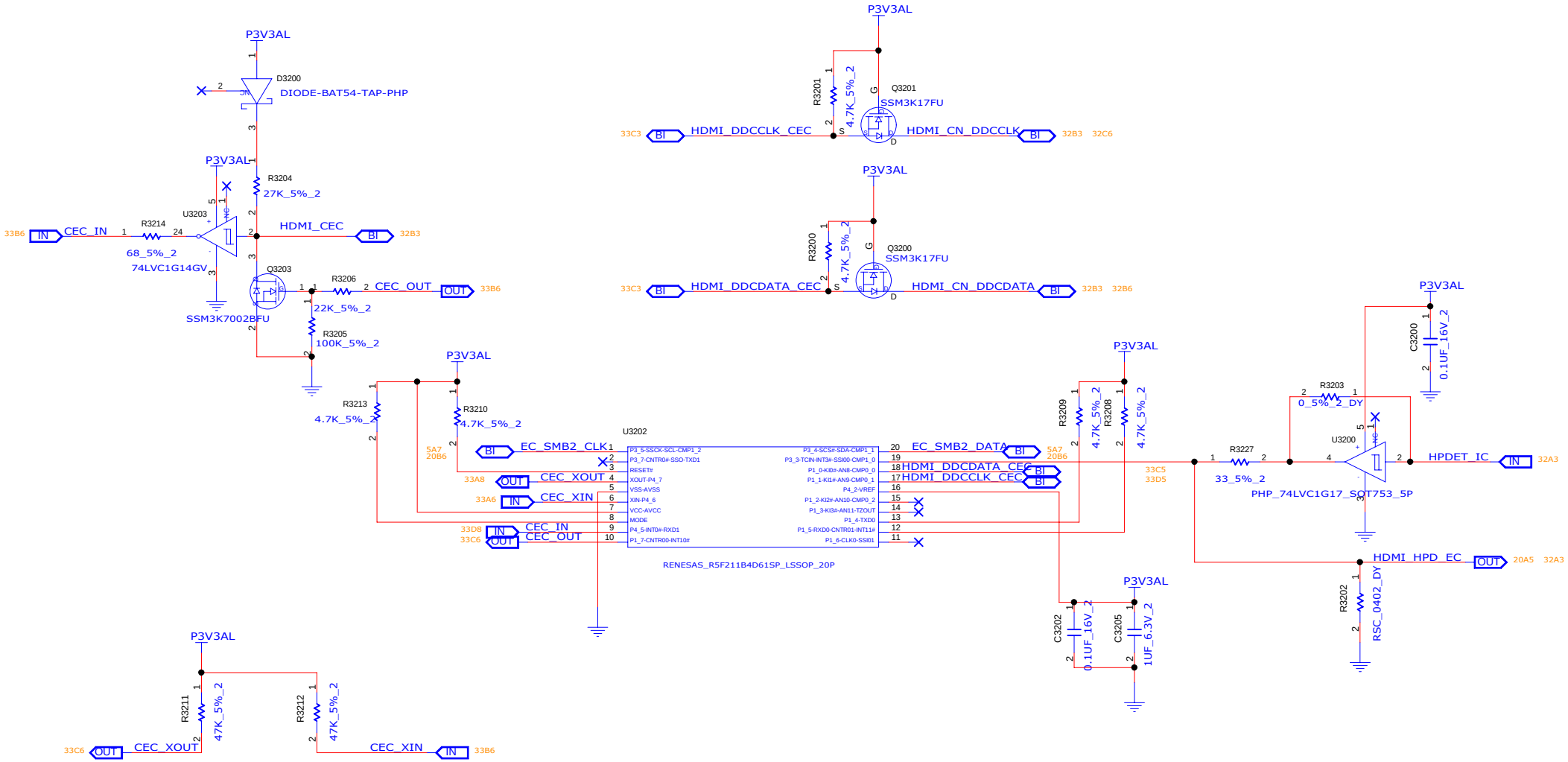

Dr-Bios.com

INVENTEC

TITLE
Dakar10ABGP
Block Diagram

SIZE	CODE	DOC.NUMBER	REV
A3	CS	1310xxxxx-0-0	X01

CHANGE by Parry Huang DATE 21-OCT-2002 SHEET 33 of 57

SO-DIMM 0
SLOT A

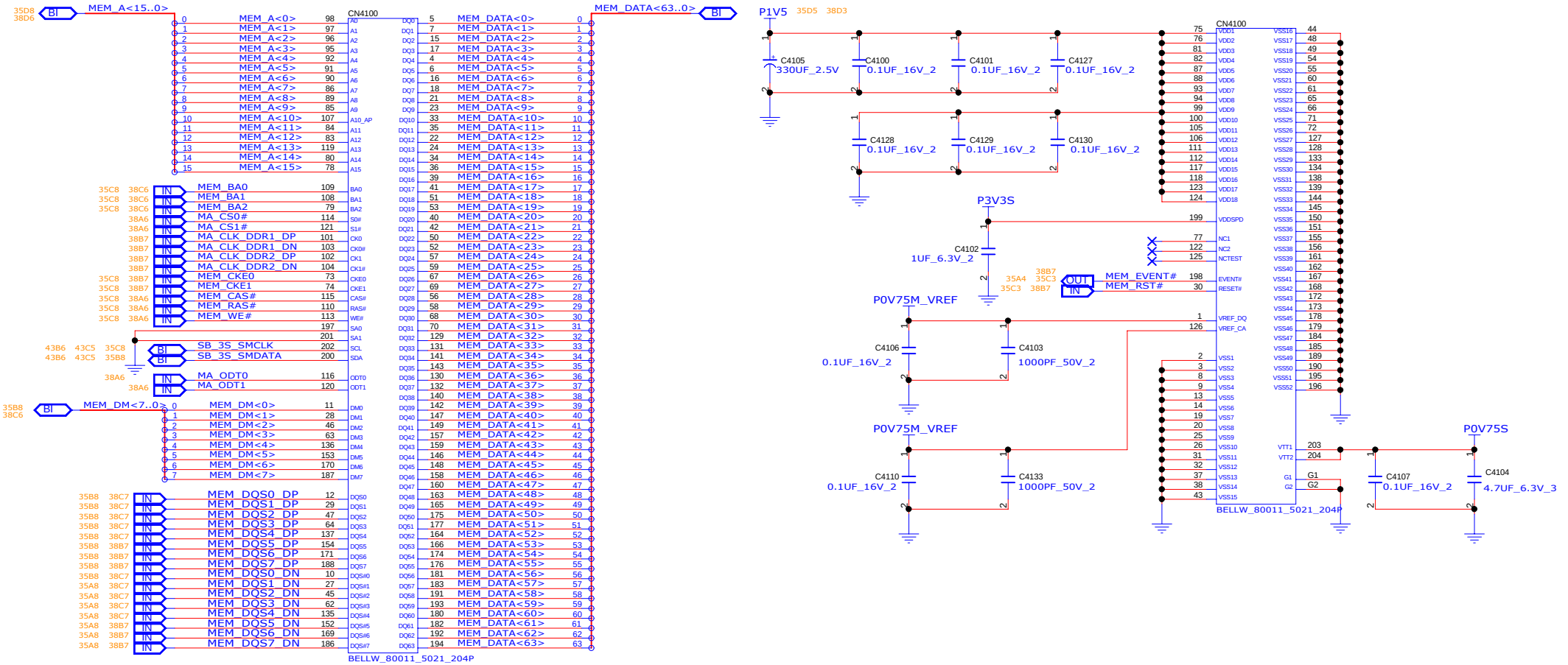

INVENTEC

TITLE
Dakar10ABGP
Block Diagram

SIZE	CODE	DOC.NUMBER	REV
A3	CS	1310xxxxx-0-0	X01

CHANGE by Parry Huang DATE 21-OCT-2002 SHEET 34 of 57

Dr-Bios.com

SO-DIMM 1
SLOT B

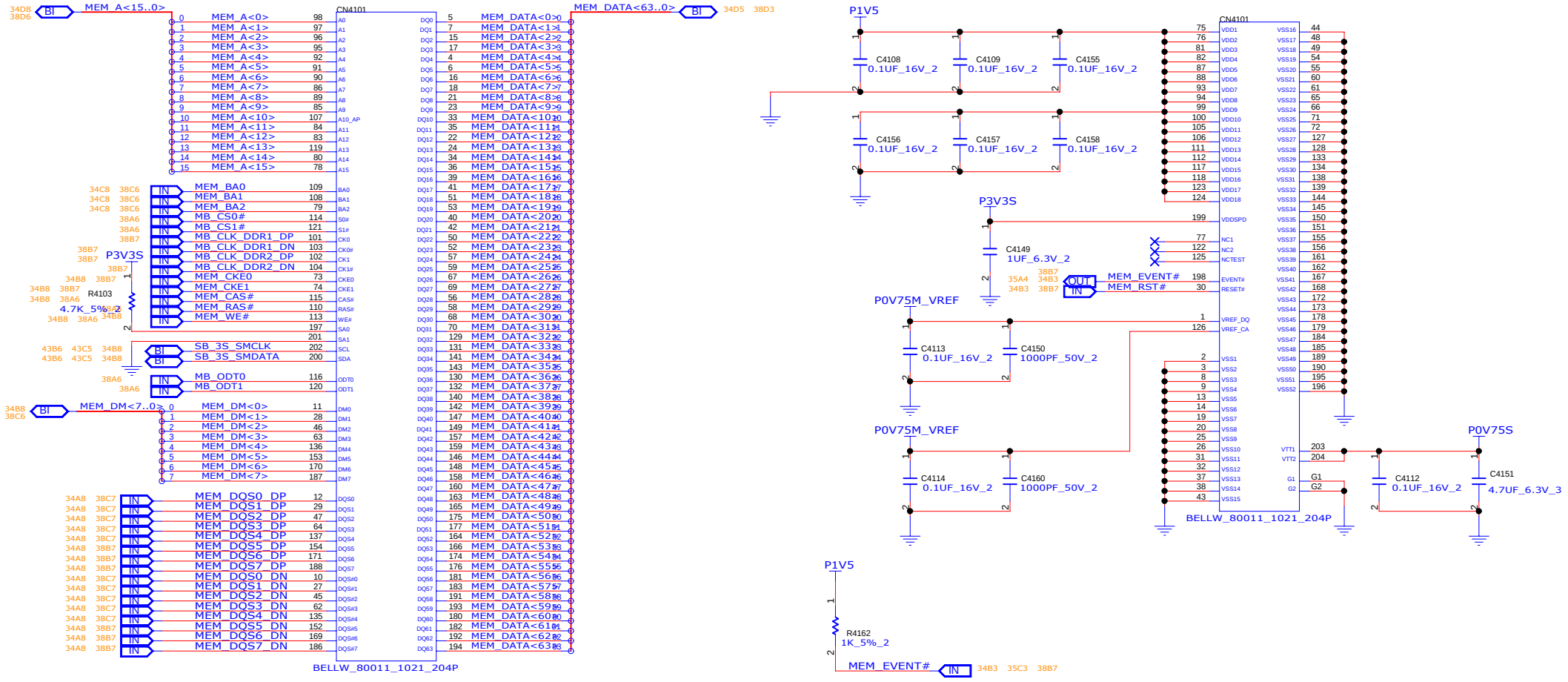

Dr-Bios.com

INVENTEC

TITLE: Dakar10ABGP Block Diagram

SIZE	CODE	DOC.NUMBER	REV
A3	CS	1310xxxxx-0-0	X01

CHANGE by Parry Huang DATE 21-OCT-2002 SHEET 35 of 57

REFERENCE 4300~4349(FAN)

REFERENCE 4411~4449(G708)

FAN CN

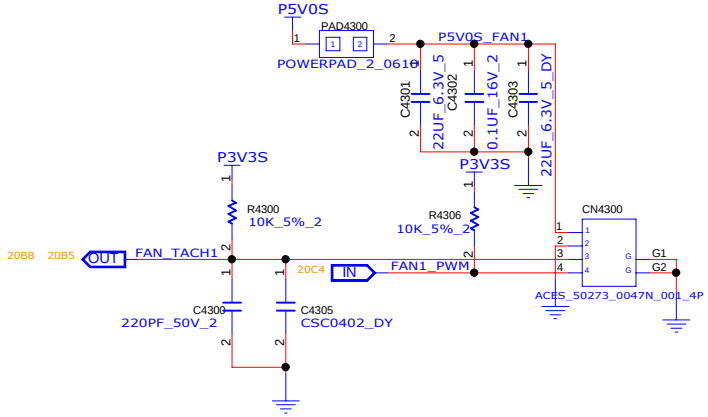

THERMAL SENSOR

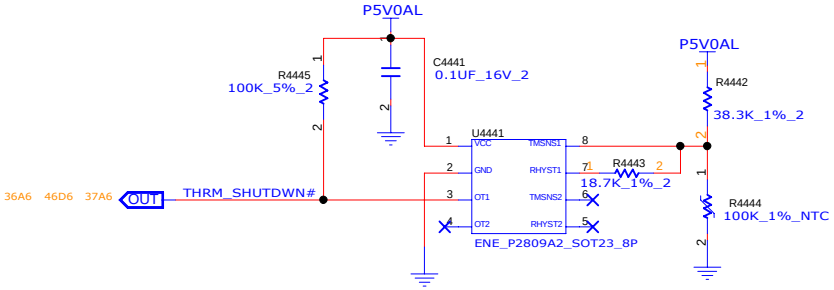

GM

R4442 38.3K_1% 6013A008850M

R4443 18.7K_1% 6013A0017101

PM

R4442 31.6K_1% 6013A008850D

R4443 15.4K_1% 6013A008840B

RESET IC

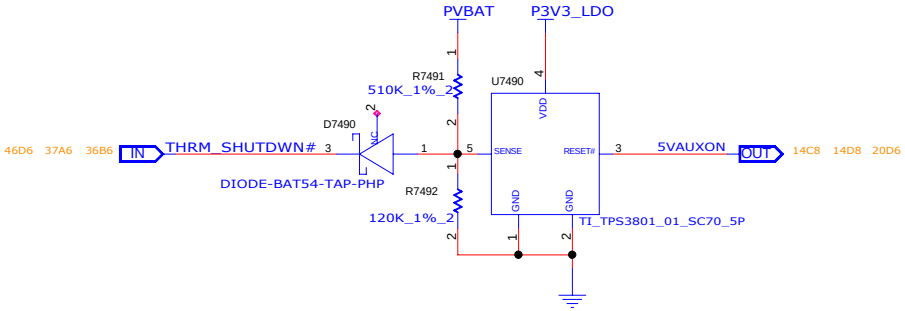

Dr-Bios.com

INVENTEC

TITLE Dakar10ABGP Block Diagram

SIZE	CODE	DOC.NUMBER	REV
A3	CS	1310xxxxx-0-0	X01

CHANGE by Parry Huang DATE 21-OCT-2002 SHEET 36 of 57

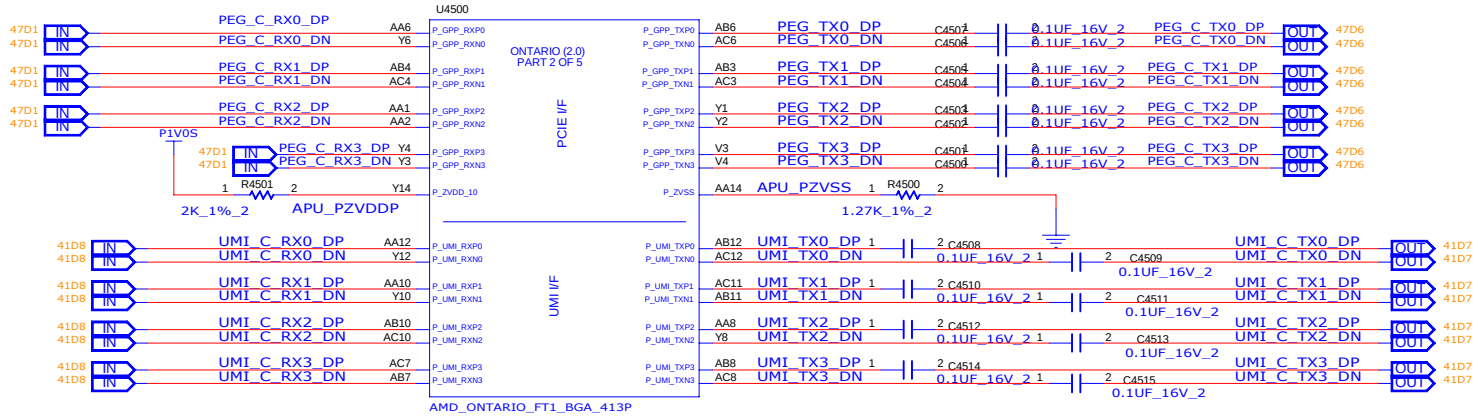

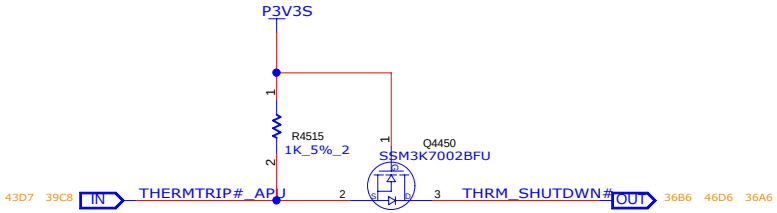

Layout: Add stitching caps if crossing plane split.

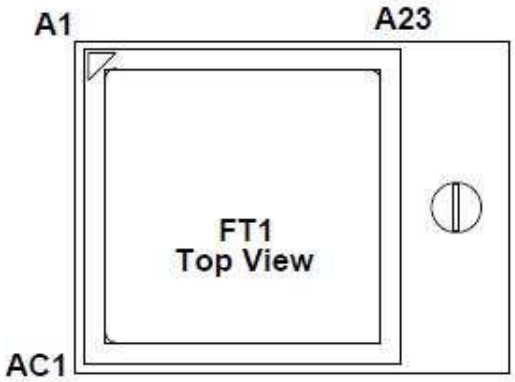

Dr-Bios.com

INVENTEC

TITLE
Dakar10ABGP
Block Diagram

SIZE	CODE	DOC.NUMBER	REV
A3	CS	1310xxxxx-0-0	X01

CHANGE by Parry Huang DATE 21-OCT-2002 SHEET 37 of 57

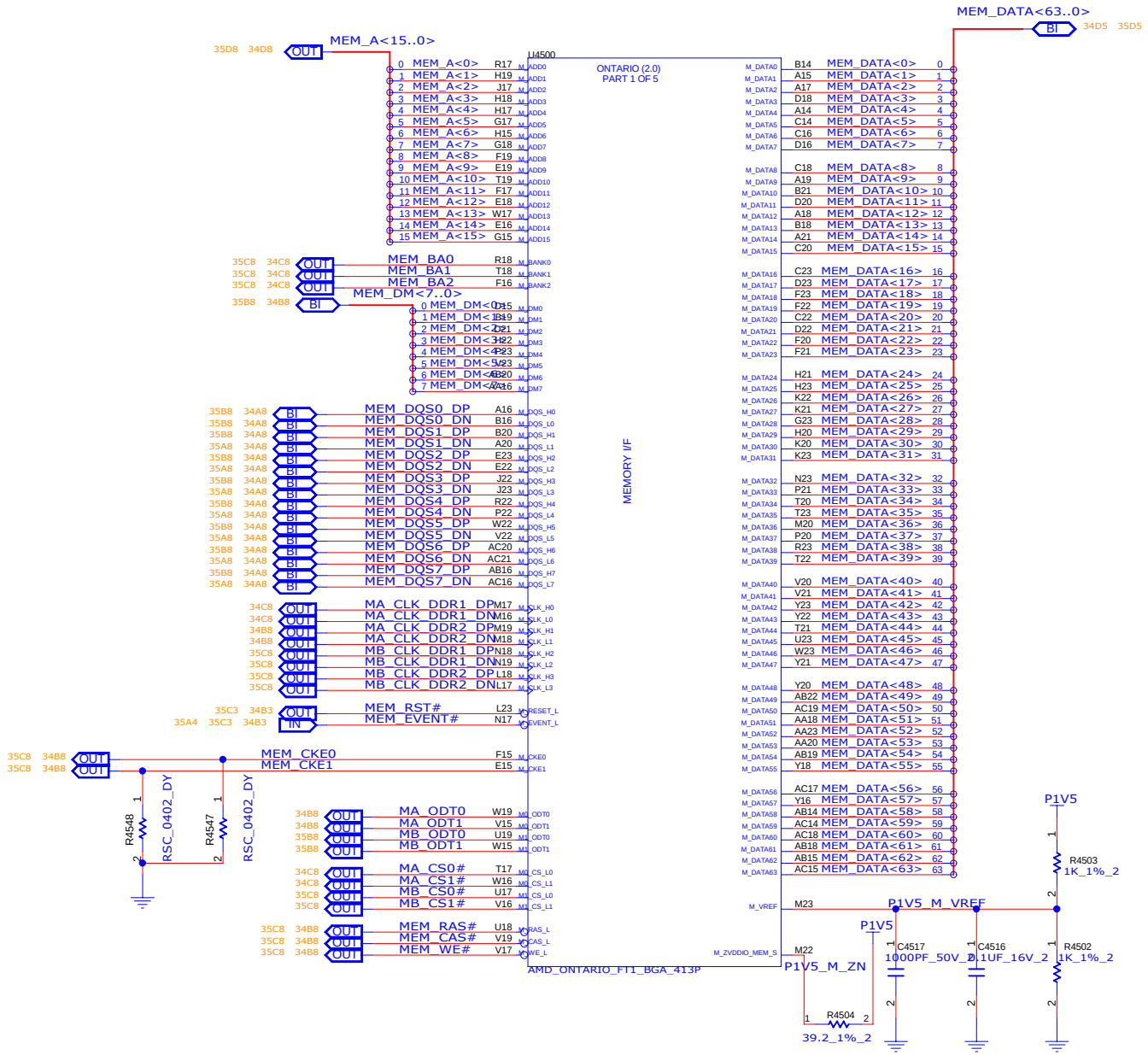

Dr-Bios.com

INVENTEC

TITLE
Dakar10ABGP
Block Diagram

SIZE	CODE	DOC.NUMBER	REV
A3	CS	1310xxxxx-0-0	X01

CHANGE by Parry Huang DATE 21-OCT-2002 SHEET 38 of 57

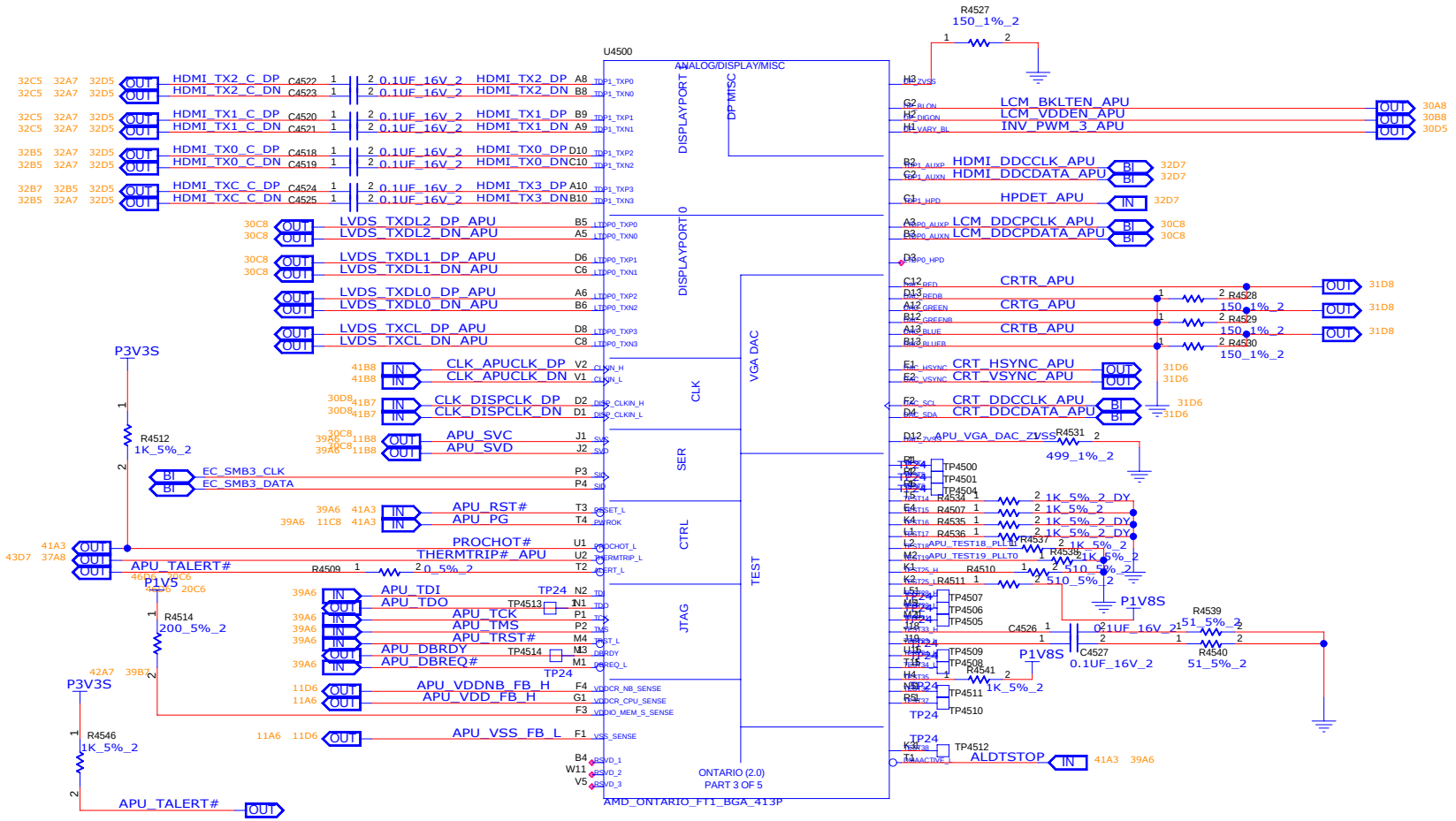

Dr-Bios.com

INVENTEC			
TITLE Dakar10ABGP Block Diagram			
SIZE A3	CODE CS	DOC.NUMBER 1310xxxxx-0-0	REV X01
CHANGE by Parry Huang	DATE 21-OCT-2002	SHEET 39 of 57	

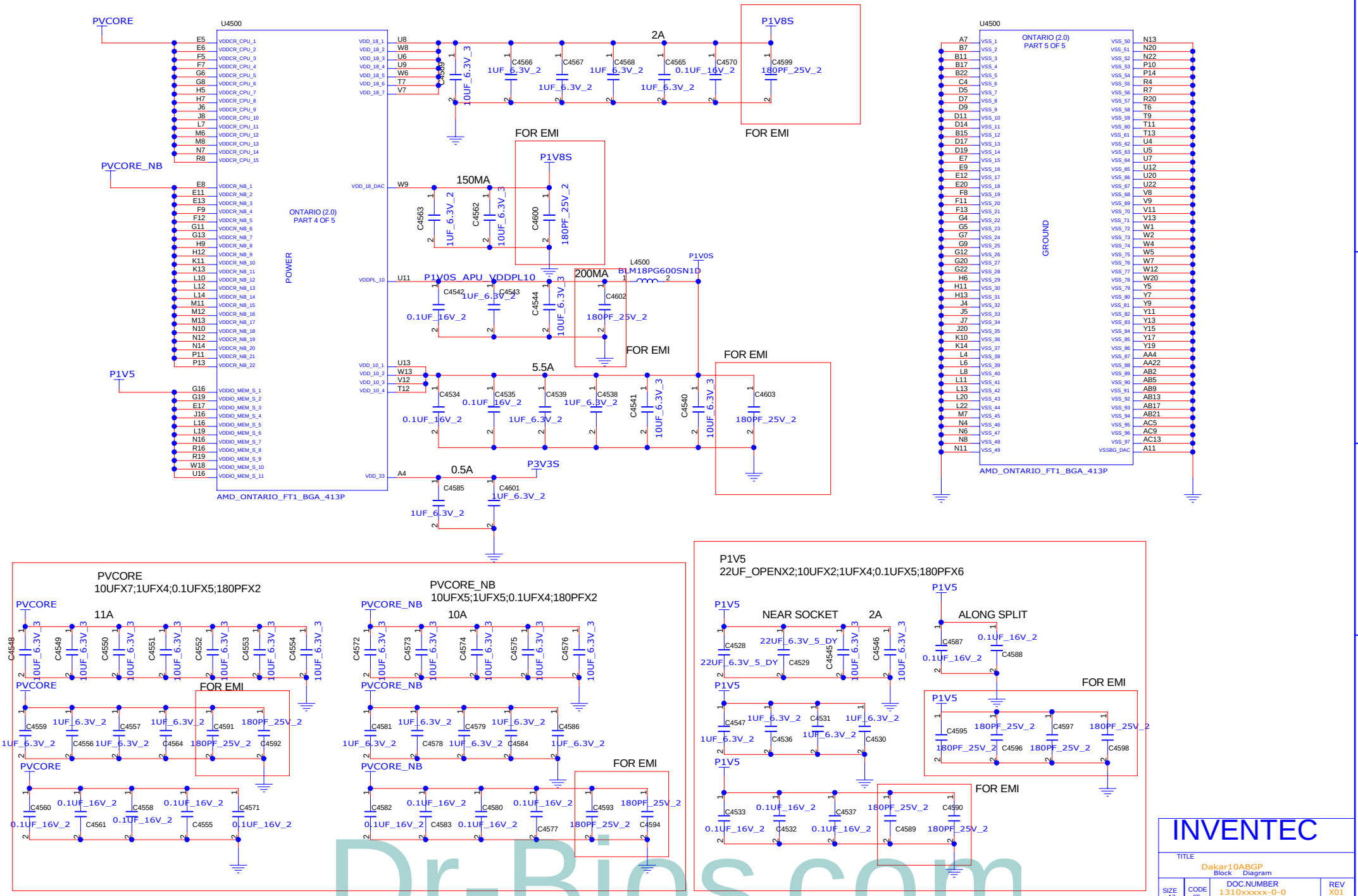
PVCORE
PVCORE_NB
P1V5
U4500
ONTARIO (2.0)
PART 4 OF 5
POWER
AMD_ONTARIO_FT1_BGA_413P
2A
P1V8S
FOR EMI
150MA
P1V0S_APU_VDDPL10
200MA
L4500
BLM18PG600SN1D
P1V0S
5.5A
0.5A
P3V3S
ONTARIO (2.0)
PART 5 OF 5
GROUND
PVCORE
10UFX7;1UFX4;0.1UFX5;180PFX2
11A
PVCORE_NB
10UFX5;1UFX5;0.1UFX4;180PFX2
10A
P1V5
22UF_OPENX2;10UFX2;1UFX4;0.1UFX5;180PFX6
NEAR SOCKET
2A
ALONG SPLIT
INVENTEC
Dakar10ABGP
Block Diagram
DOC.NUMBER
1310xxxxx-0-0
REV
X01
SIZE
A3
CODE
CS
SHEET 40 of 57
CHANGE by Parry Huang
DATE 21-OCT-2002

Dr-Bios.com

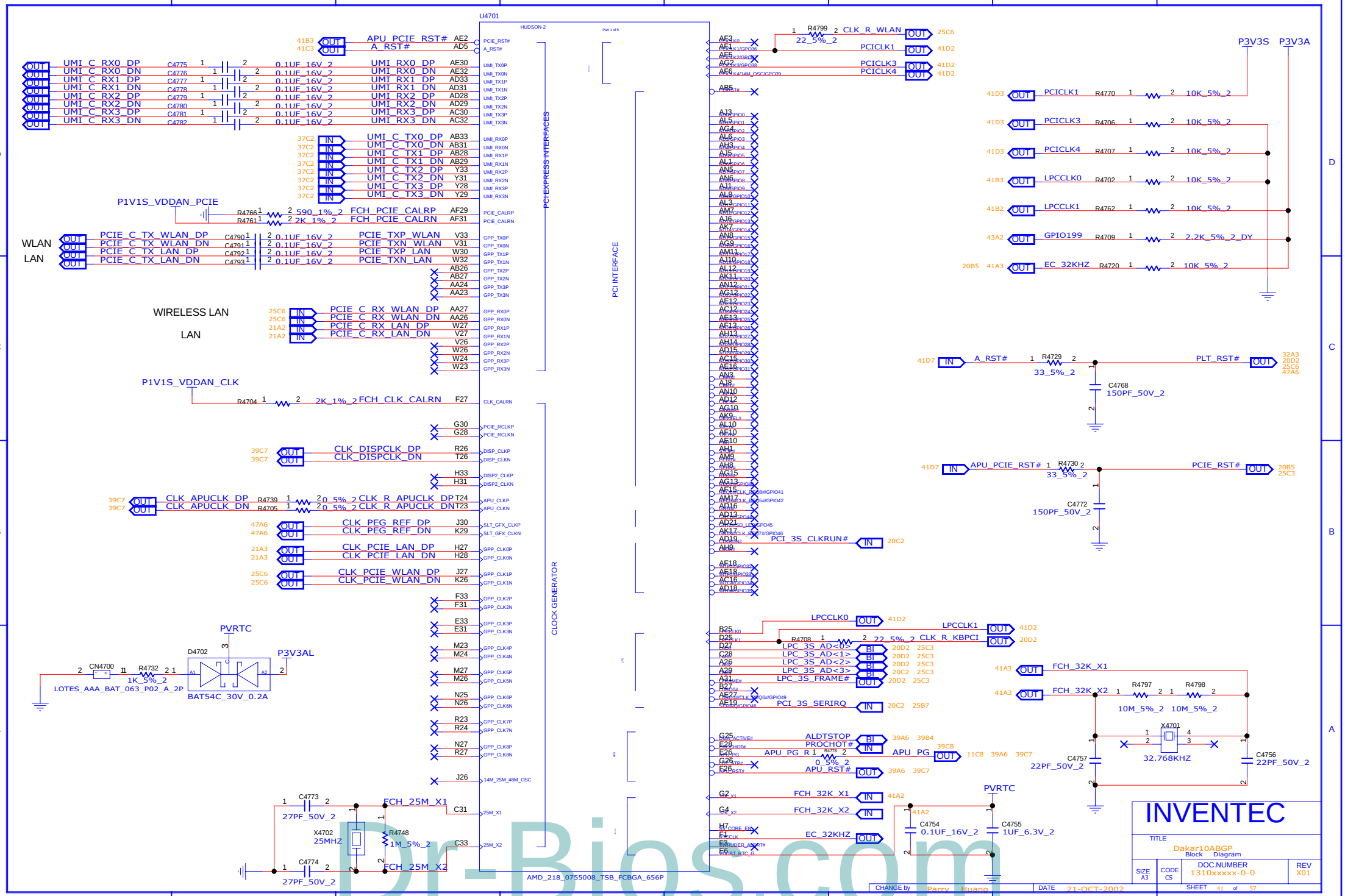
U4701
HUDSON-2
PCIEXPRESS INTERFACES
PCI INTERFACE
CLOCK GENERATOR
AMD_218_0755008_TSB_FCBGA_656P
APU_PCIE_RST#
A_RST#
UMI_C_RX0_DP
UMI_C_RX0_DN
UMI_C_RX1_DP
UMI_C_RX1_DN
UMI_C_RX2_DP
UMI_C_RX2_DN
UMI_C_RX3_DP
UMI_C_RX3_DN
UMI_C_TX0_DP
UMI_C_TX0_DN
UMI_C_TX1_DP
UMI_C_TX1_DN
UMI_C_TX2_DP
UMI_C_TX2_DN
UMI_C_TX3_DP
UMI_C_TX3_DN
P1V1S_VDDAN_PCIE
FCH_PCIE_CALRP
FCH_PCIE_CALRN
WLAN
LAN
PCIE_C_TX_WLAN_DP
PCIE_C_TX_WLAN_DN
PCIE_C_TX_LAN_DP
PCIE_C_TX_LAN_DN
PCIE_TXP_WLAN
PCIE_TXN_WLAN
PCIE_TXP_LAN
PCIE_TXN_LAN
WIRELESS LAN
LAN
PCIE_C_RX_WLAN_DP
PCIE_C_RX_WLAN_DN
PCIE_C_RX_LAN_DP
PCIE_C_RX_LAN_DN
P1V1S_VDDAN_CLK
FCH_CLK_CALRN
CLK_DISPCLK_DP
CLK_DISPCLK_DN
CLK_APUCLK_DP
CLK_APUCLK_DN
CLK_R_APUCLK_DP
CLK_R_APUCLK_DN
CLK_PEG_REF_DP
CLK_PEG_REF_DN
CLK_PCIE_LAN_DP
CLK_PCIE_LAN_DN
CLK_PCIE_WLAN_DP
CLK_PCIE_WLAN_DN
PVRTC
P3V3AL
CN4700
LOTES_AAA_BAT_063_P02_A_2P
D4702
BAT54C_30V_0.2A
FCH_25M_X1
FCH_25M_X2
X4702
25MHZ
CLK_R_WLAN
PCICLK1
PCICLK3
PCICLK4
PCI_3S_CLKRUN#
PCI_3S_SERIRQ
LPCCLK0
LPCCLK1
CLK_R_KBPCI
LPC_3S_AD<0>
LPC_3S_AD<1>
LPC_3S_AD<2>
LPC_3S_AD<3>
LPC_3S_FRAME#
ALDTSTOP
PROCHOT#
APU_PG
APU_RST#
FCH_32K_X1
FCH_32K_X2
EC_32KHZ
P3V3S
P3V3A
LPCCLK0
LPCCLK1
GPIO199
EC_32KHZ
A_RST#
PLT_RST#
APU_PCIE_RST#
PCIE_RST#
FCH_32K_X1
FCH_32K_X2
X4701
32.768KHZ
PVRTC
INVENTEC
TITLE
Dakar10ABGP
Block Diagram
SIZE A3
CODE CS
DOC.NUMBER 1310xxxxx-0-0
REV X01
CHANGE by Parry Huang
DATE 21-OCT-2002
SHEET 41 of 57

Dr-Bios.com

INVENTEC

TITLE
Dakar10ABGP
Block Diagram

SIZE	CODE	DOC.NUMBER	REV
A3	CS	1310xxxxx-0-0	X01

CHANGE by Parry Huang DATE 21-OCT-2002 SHEET 42 of 57

Dr-Bios.com

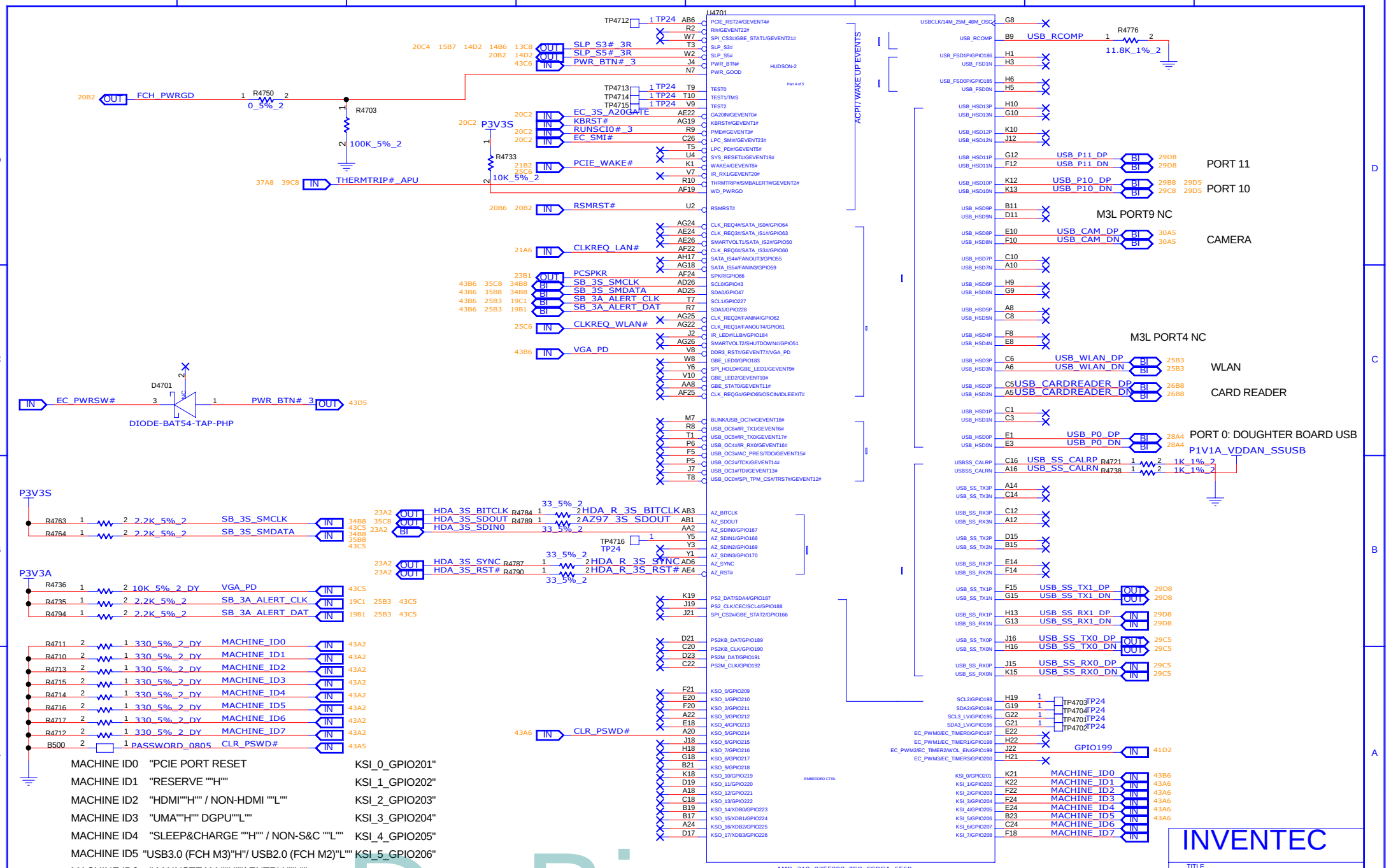
U4701
HUDSON-2
Part 4 of 5
ACPI / WAKE UP EVENTS
EMBEDDED CTRL
AMD_218_0755008_TSB_FCBGA_656P
FCH_PWRGD
R4750 0_5%_2
R4703 100K_5%_2
P3V3S
R4733 10K_5%_2
THERMTRIP#_APU
SLP_S3#_3R
SLP_S5#_3R
PWR_BTN#_3
EC_3S_A20GATE
KBRST#
RUNSCIO#_3
EC_SMI#
PCIE_WAKE#
RSMRST#
CLKREQ_LAN#
PCSPKR
SB_3S_SMCLK
SB_3S_SMDATA
SB_3A_ALERT_CLK
SB_3A_ALERT_DAT
CLKREQ_WLAN#
VGA_PD
EC_PWRSW#
D4701
DIODE-BAT54-TAP-PHP
PWR_BTN#_3
HDA_3S_BITCLK
HDA_3S_SDOUT
HDA_3S_SDIN0
HDA_R_3S_BITCLK
AZ97_3S_SDOUT
HDA_3S_SYNC
HDA_3S_RST#
HDA_R_3S_SYNC
HDA_R_3S_RST#
TP4716 TP24
P3V3A
R4736 10K_5%_2_DY VGA_PD
R4735 2.2K_5%_2 SB_3A_ALERT_CLK
R4794 2.2K_5%_2 SB_3A_ALERT_DAT
R4763 2.2K_5%_2 SB_3S_SMCLK
R4764 2.2K_5%_2 SB_3S_SMDATA
R4711 330_5%_2_DY MACHINE_ID0
R4710 330_5%_2_DY MACHINE_ID1
R4713 330_5%_2_DY MACHINE_ID2
R4715 330_5%_2_DY MACHINE_ID3
R4714 330_5%_2_DY MACHINE_ID4
R4716 330_5%_2_DY MACHINE_ID5
R4717 330_5%_2_DY MACHINE_ID6
R4712 330_5%_2_DY MACHINE_ID7
B500 PASSWORD_0805 CLR_PSWD#
CLR_PSWD#
USB_RCOMP
R4776 11.8K_1%_2
USB_P11_DP
USB_P11_DN
PORT 11
USB_P10_DP
USB_P10_DN
PORT 10
M3L PORT9 NC
USB_CAM_DP
USB_CAM_DN
CAMERA
M3L PORT4 NC
USB_WLAN_DP
USB_WLAN_DN
WLAN
USB_CARDREADER_DP
USB_CARDREADER_DN
CARD READER
USB_P0_DP
USB_P0_DN
PORT 0: DOUGHTER BOARD USB
P1V1A_VDDAN_SSUSB
USB_SS_CALRP
USB_SS_CALRN
R4721 1K_1%_2
R4738 1K_1%_2
USB_SS_TX1_DP
USB_SS_TX1_DN
USB_SS_RX1_DP
USB_SS_RX1_DN
USB_SS_TX0_DP
USB_SS_TX0_DN
USB_SS_RX0_DP
USB_SS_RX0_DN
TP4703 TP24
TP4704 TP24
TP4701 TP24
TP4702 TP24
GPIO199
MACHINE_ID0
MACHINE_ID1
MACHINE_ID2
MACHINE_ID3
MACHINE_ID4
MACHINE_ID5
MACHINE_ID6
MACHINE_ID7
MACHINE ID0 "PCIE PORT RESET KSI_0_GPIO201"
MACHINE ID1 "RESERVE ""H"" KSI_1_GPIO202"
MACHINE ID2 "HDMI""H"" / NON-HDMI ""L"" KSI_2_GPIO203"
MACHINE ID3 "UMA""H"" DGPU""L"" KSI_3_GPIO204"
MACHINE ID4 "SLEEP&CHARGE ""H"" / NON-S&C ""L"" KSI_4_GPIO205"
MACHINE ID5 "USB3.0 (FCH M3)"H"/ USB2.0 (FCH M2)"L"" KSI_5_GPIO206"
MACHINE ID6 " MAINSTEAM ""H""/ ENTRY ""L"" KSI_6_GPIO207"
MACHINE ID7 "RESERVE ""H"" KSI_7_GPIO208"
CLEAR PASSWORD KSO_5_GPIO214
INVENTEC
TITLE
Dakar10ABGP
Block Diagram
SIZE A3
CODE CS
DOC.NUMBER 1310xxxxx-0-0
REV X01
CHANGE by Parry Huang
DATE 21-OCT-2002
SHEET 43 of 57

Dr-Bios.com

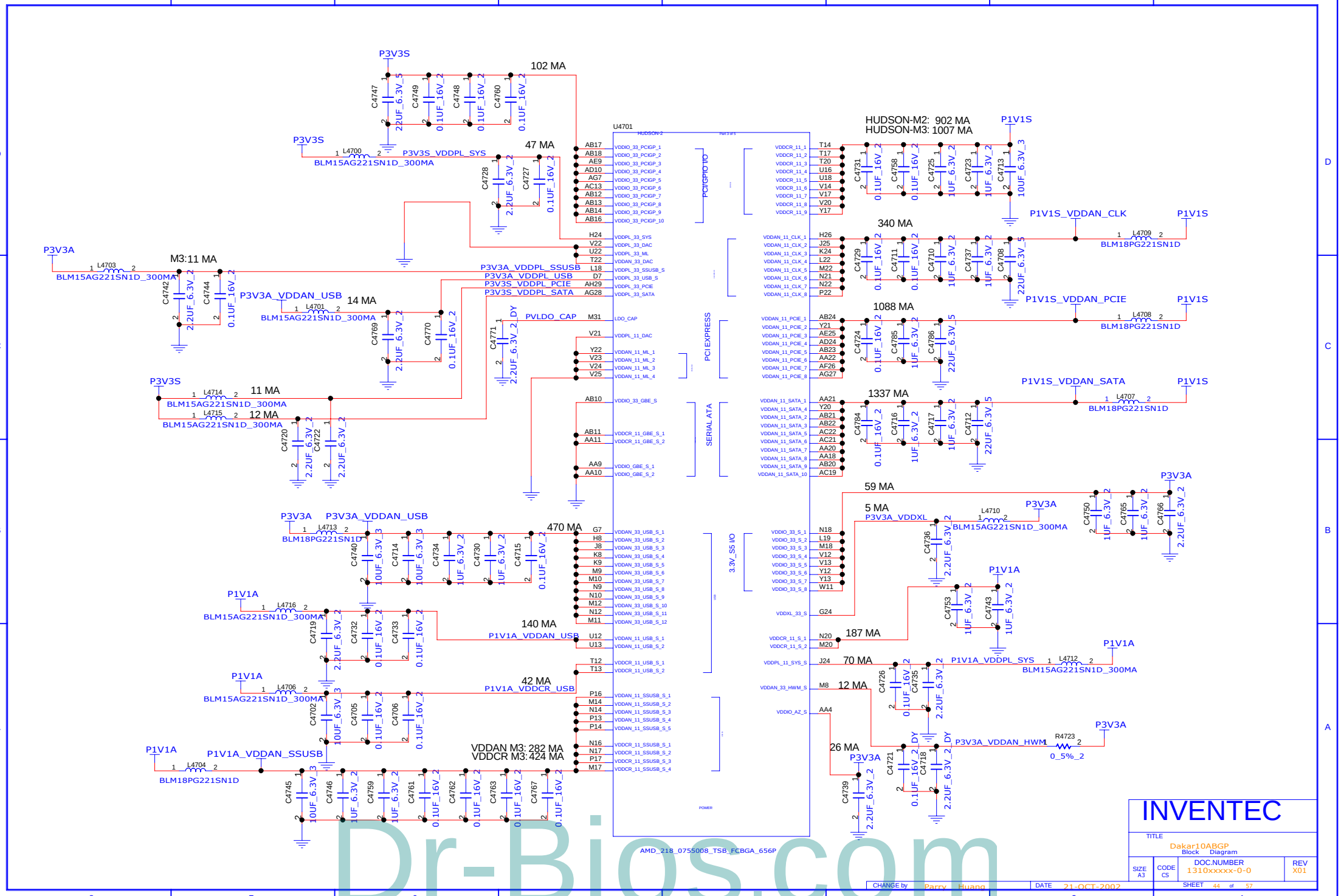
U4701
HUDSON-2
AMD_218_0755008_TSB_FCBGA_656P
P3V3S
102 MA
C4747 22UF_6.3V_5
C4749 0.1UF_16V_2
C4748 0.1UF_16V_2
C4760 0.1UF_16V_2
P3V3S_VDDPL_SYS
L4700 BLM15AG221SN1D_300MA
47 MA
C4728 2.2UF_6.3V_2
C4727 0.1UF_16V_2
P3V3A
M3:11 MA
L4703 BLM15AG221SN1D_300MA
C4742 2.2UF_6.3V_2
C4744 0.1UF_16V_2
P3V3A_VDDPL_SSUSB
P3V3A_VDDPL_USB
P3V3S_VDDPL_PCIE
P3V3S_VDDPL_SATA
P3V3A_VDDAN_USB
14 MA
L4701 BLM15AG221SN1D_300MA
C4769 2.2UF_6.3V_2
C4770 0.1UF_16V_2
PVLDO_CAP
C4771 2.2UF_6.3V_2_DY
P3V3S
11 MA
L4714 BLM15AG221SN1D_300MA
12 MA
L4715 BLM15AG221SN1D_300MA
C4720 2.2UF_6.3V_2
C4722 2.2UF_6.3V_2
P3V3A
P3V3A_VDDAN_USB
L4713 BLM18PG221SN1D
470 MA
C4740 10UF_6.3V_3
C4714 10UF_6.3V_3
C4734 1UF_6.3V_2
C4730 1UF_6.3V_2
C4715 0.1UF_16V_2
P1V1A
L4716 BLM15AG221SN1D_300MA
C4719 2.2UF_6.3V_2
C4732 0.1UF_16V_2
C4733 0.1UF_16V_2
140 MA
P1V1A_VDDAN_USB
P1V1A
L4706 BLM15AG221SN1D_300MA
C4702 10UF_6.3V_3
C4705 0.1UF_16V_2
C4706 0.1UF_16V_2
42 MA
P1V1A_VDDCR_USB
P1V1A
P1V1A_VDDAN_SSUSB
L4704 BLM18PG221SN1D
C4745 10UF_6.3V_3
C4746 1UF_6.3V_2
C4759 1UF_6.3V_2
C4761 0.1UF_16V_2
C4762 0.1UF_16V_2
C4763 0.1UF_16V_2
C4767 0.1UF_16V_2
VDDAN M3: 282 MA
VDDCR M3: 424 MA
HUDSON-M2: 902 MA
HUDSON-M3: 1007 MA
P1V1S
C4731 0.1UF_16V_2
C4758 0.1UF_16V_2
C4725 1UF_6.3V_2
C4723 1UF_6.3V_2
C4713 10UF_6.3V_3
P1V1S_VDDAN_CLK
L4709 BLM18PG221SN1D
340 MA
C4729 0.1UF_16V_2
C4711 0.1UF_16V_2
C4710 1UF_6.3V_2
C4737 1UF_6.3V_2
C4708 22UF_6.3V_5
P1V1S_VDDAN_PCIE
L4708 BLM18PG221SN1D
1088 MA
C4724 0.1UF_16V_2
C4785 1UF_6.3V_2
C4786 22UF_6.3V_5
P1V1S_VDDAN_SATA
L4707 BLM18PG221SN1D
1337 MA
C4784 0.1UF_16V_2
C4716 1UF_6.3V_2
C4717 1UF_6.3V_2
C4712 22UF_6.3V_5
59 MA
P3V3A
C4750 1UF_6.3V_2
C4765 1UF_6.3V_2
C4766 2.2UF_6.3V_2
5 MA
P3V3A_VDDXL
L4710 BLM15AG221SN1D_300MA
C4736 2.2UF_6.3V_2
P1V1A
C4753 1UF_6.3V_2
C4743 1UF_6.3V_2
187 MA
P1V1A
70 MA
P1V1A_VDDPL_SYS
L4712 BLM15AG221SN1D_300MA
C4726 0.1UF_16V_2
C4735 2.2UF_6.3V_2
12 MA
P3V3A
P3V3A_VDDAN_HWM
R4723 0_5%_2
26 MA
P3V3A
C4739 2.2UF_6.3V_2
C4721 0.1UF_16V_2_DY
C4718 2.2UF_6.3V_2_DY
PCI/GPIO I/O
PCI EXPRESS
SERIAL ATA
3.3V_S5 I/O
POWER
INVENTEC
TITLE
Dakar10ABGP
Block Diagram
SIZE A3
CODE CS
DOC.NUMBER 1310xxxxx-0-0
REV X01
CHANGE by Parry Huang
DATE 21-OCT-2002
SHEET 44 of 57

Dr-Bios.com

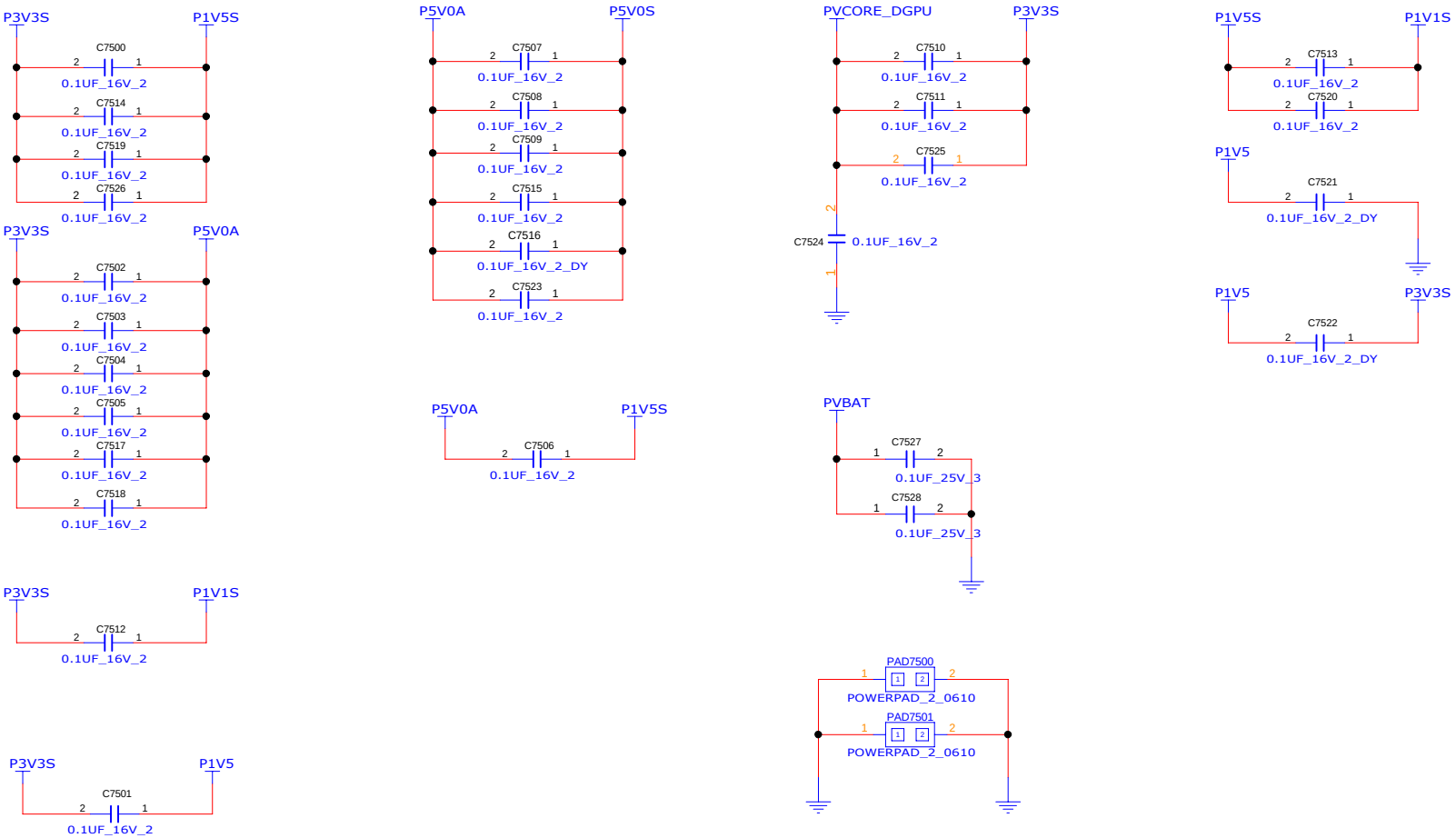

Dr-Bios.com

INVENTEC

TITLE
Dakar10ABGP
Block Diagram

SIZE	CODE	DOC.NUMBER	REV
A3	CS	1310xxxxx-0-0	X01

CHANGE by Parry Huang | DATE 21-OCT-2002 | SHEET 45 of 57

2012 Dakar VRAM table				VGA support		
ID	Memory Type	Configuration	Channel Size	Seymour XT	Thames LE	Thames XT
0	Hynix	H5TQ1G63DFR-11C	64Mx16 * 4 pces	512MB	V	
1	Hynix	H5TQ2G63BFR-11C	128Mx16 * 4 pces	1GB	V	
2	Hynix	H5TQ2G63DFR-11C	128Mx16 * 4 pces	1GB	V	
3	reserve					
4	Hynix	H5TQ1G63DFR-11C	64Mx16 * 8 pces	1GB		V V
5	Hynix	H5TQ2G63BFR-11C	128Mx16 * 8 pces	2GB		V V
6	Hynix	H5TQ2G63DFR-11C	128Mx16 * 8 pces	2GB		V V
7	reverse					
8	AMD	23EY2387MC11	64Mx16 * 4 pces	512MB	V	
9	AMD	23EY4187MA11	128Mx16 * 4 pces	1GB	V	
10	AMD	23EY4187MB11	128Mx16 * 4 pces	1GB	V	
11	reserve					
12	AMD	23EY2387MC11	64Mx16 * 8 pces	1GB		V V
13	AMD	23EY4187MA11	128Mx16 * 8 pces	2GB		V V
14	AMD	23EY4187MB11	128Mx16 * 8 pces	2GB		V V
15	reverse					

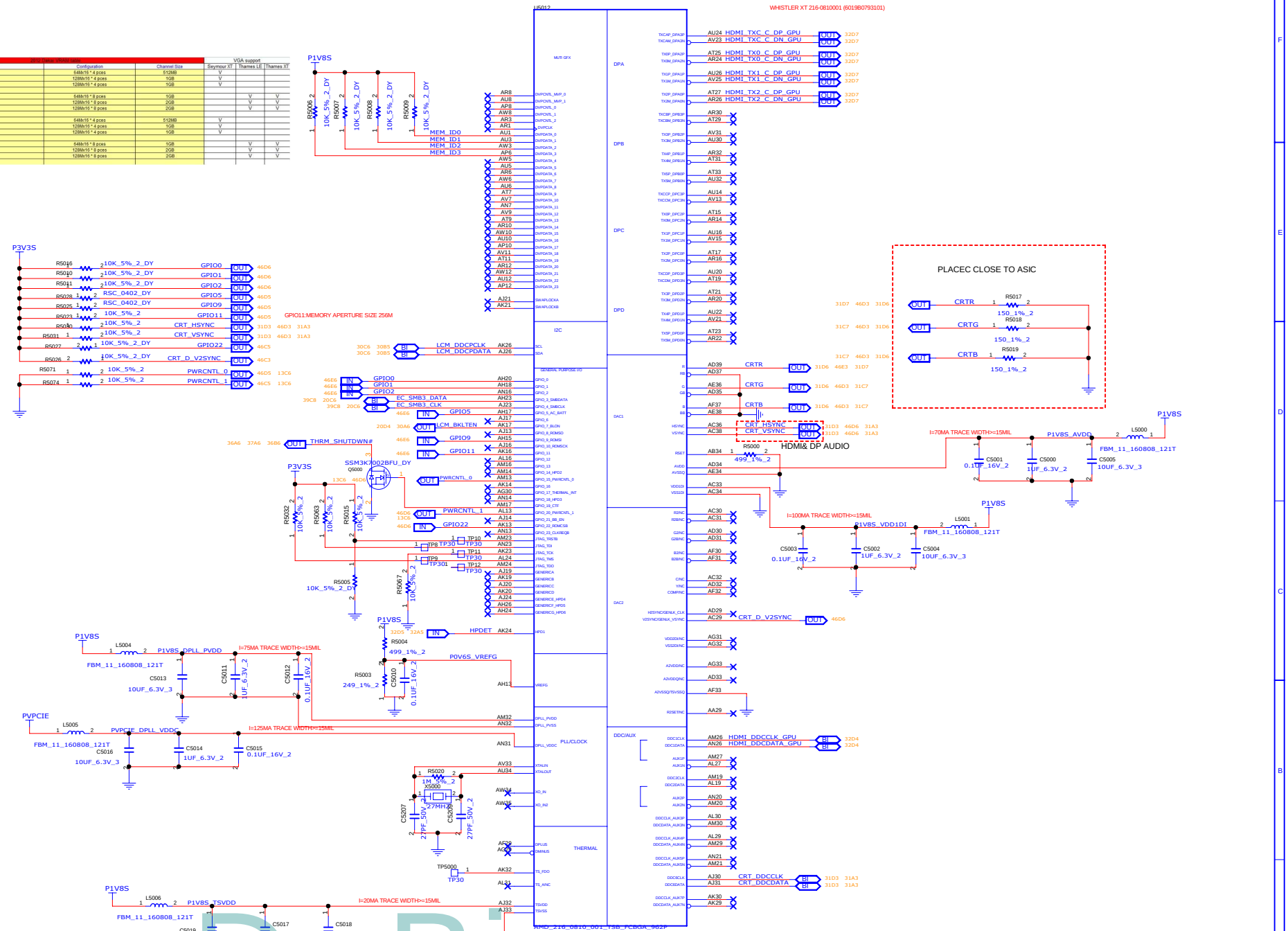

Dr-Bios.com

INVENTEC

TITLE: Dakar10ABGP Block Diagram

SIZE	CODE	DOC.NUMBER	REV
C	CS	1310xxxxx-0-0	X01

CHANGE by Perry Huang DATE 21-OCT-2002 SHEET 46 of 57

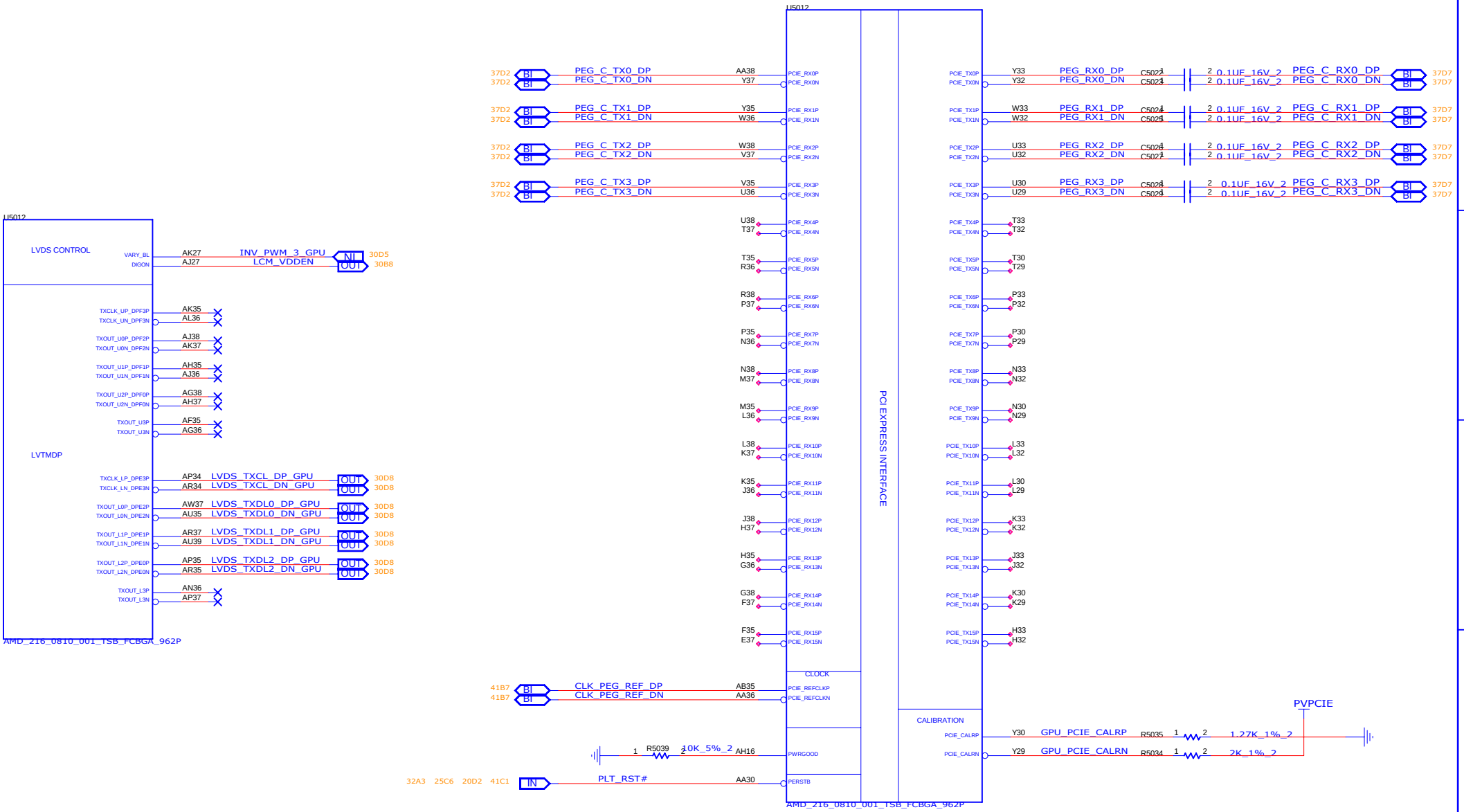

Dr-Bios.com

INVENTEC

TITLE
Dakar10ABGP
Block Diagram

SIZE	CODE	DOC.NUMBER	REV
A3	CS	1310xxxxx-0-0	X01

CHANGE by Parry Huang DATE 21-OCT-2002 SHEET 47 of 57

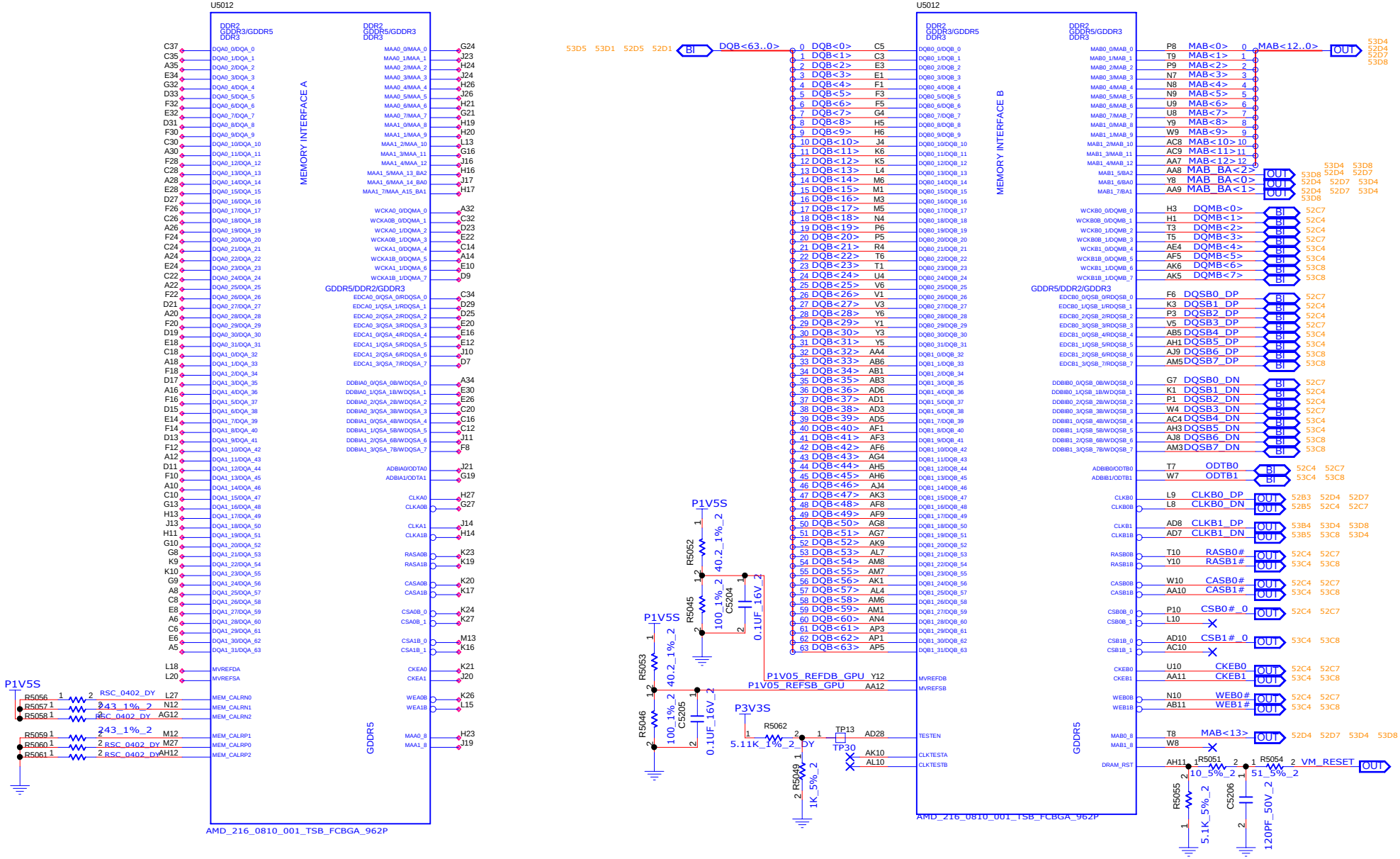

INVENTEC

TITLE

Dakar10ABGP
Block Diagram

SIZE	CODE	DOC.NUMBER	REV
A3	CS	1310xxxxx-0-0	X01

CHANGE by Parry Huang DATE 21-OCT-2002 SHEET 48 of 57

Dr-Bios.com

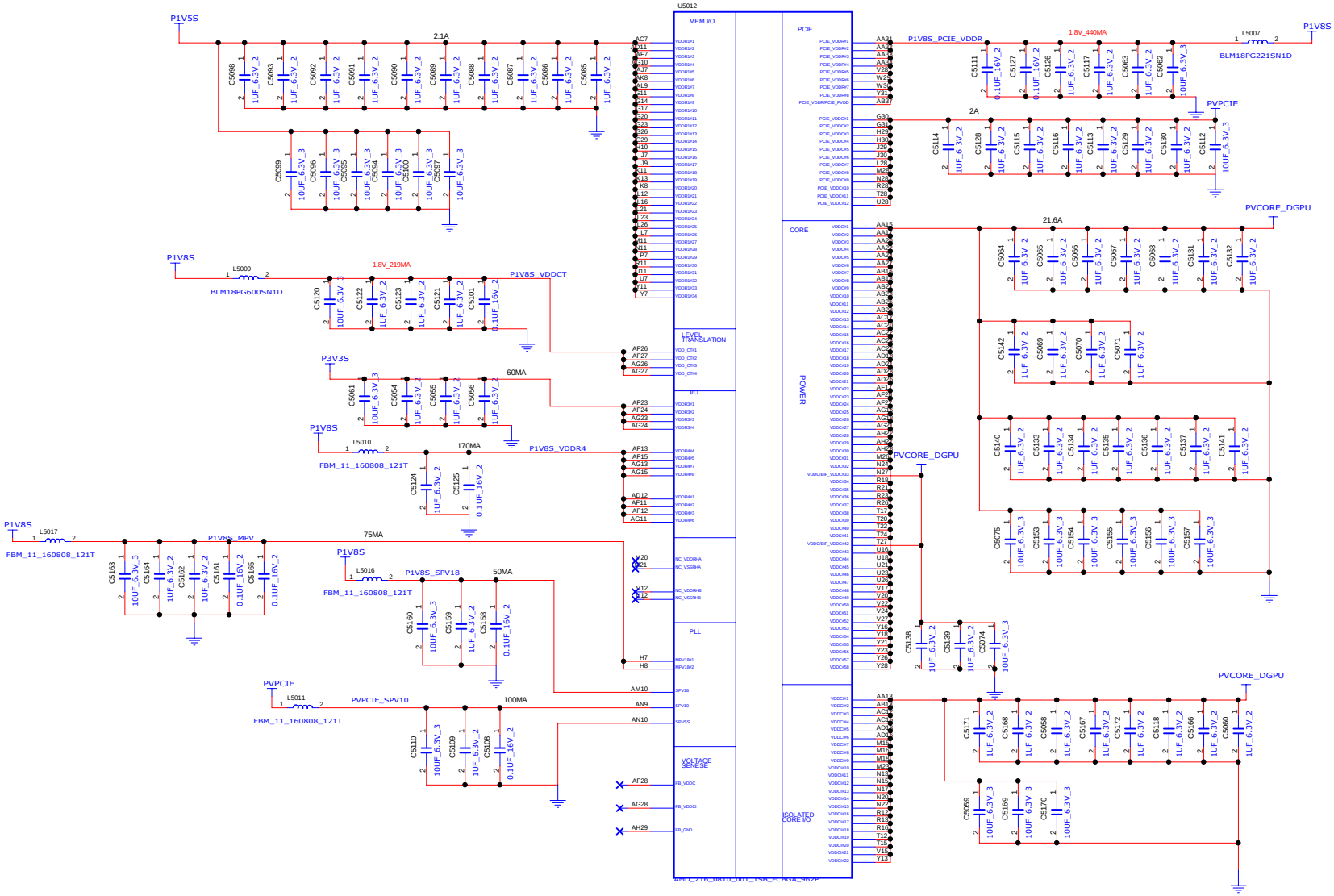

Dr-Bios.com

INVENTEC

TITLE Dakar10ABGP Block Diagram

SIZE	CODE	DOC.NUMBER	REV
C	CS	1310xxxxx-0-0	X01

CHANGE by Perry Huang DATE 21-OCT-2002 SHEET 49 of 57

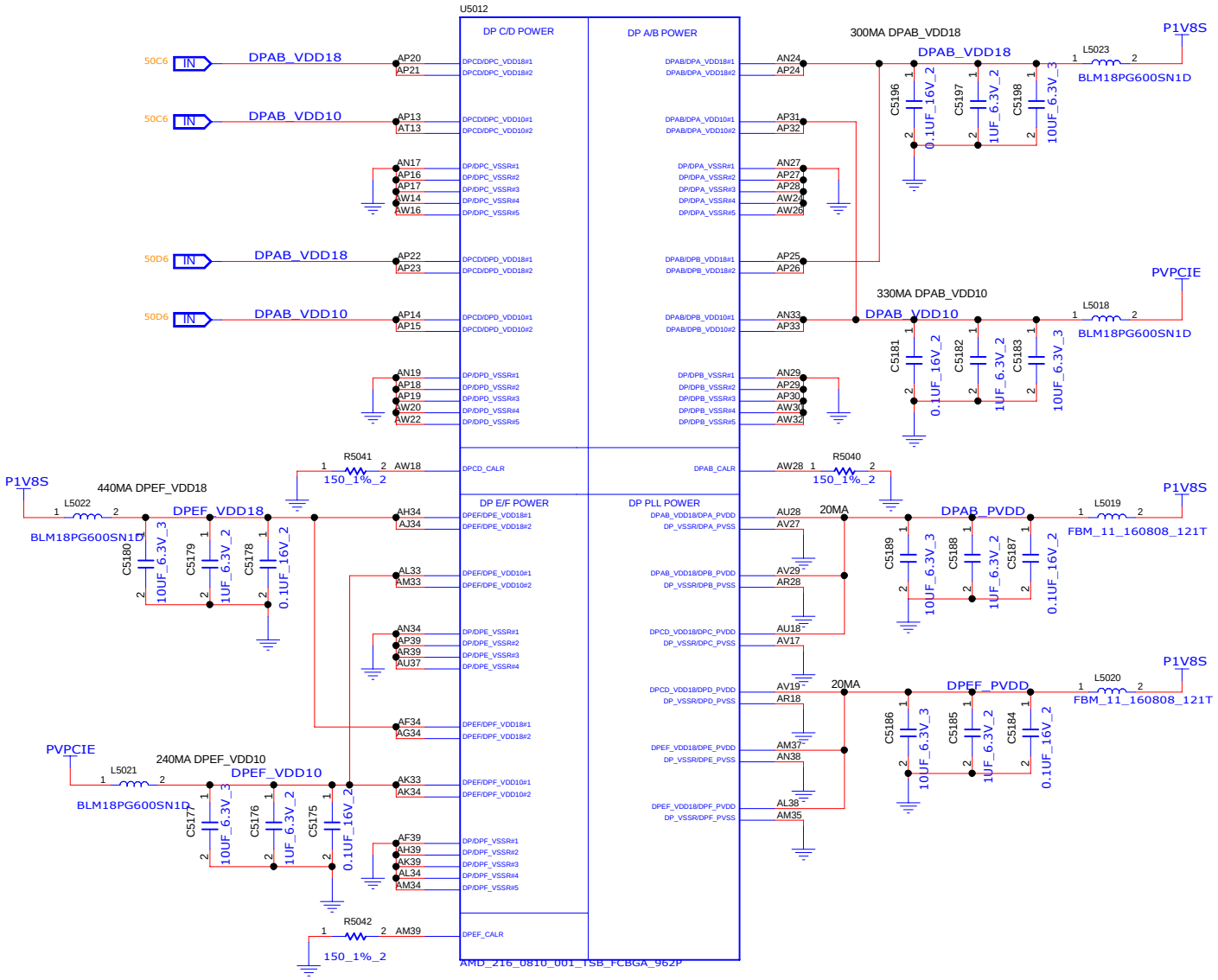

Dr-Bios.com

INVENTEC

TITLE
Dakar10ABGP
Block Diagram

SIZE	CODE	DOC.NUMBER	REV
A3	CS	1310xxxxx-0-0	X01

CHANGE by Parry Huang | DATE 21-OCT-2002 | SHEET 50 of 57

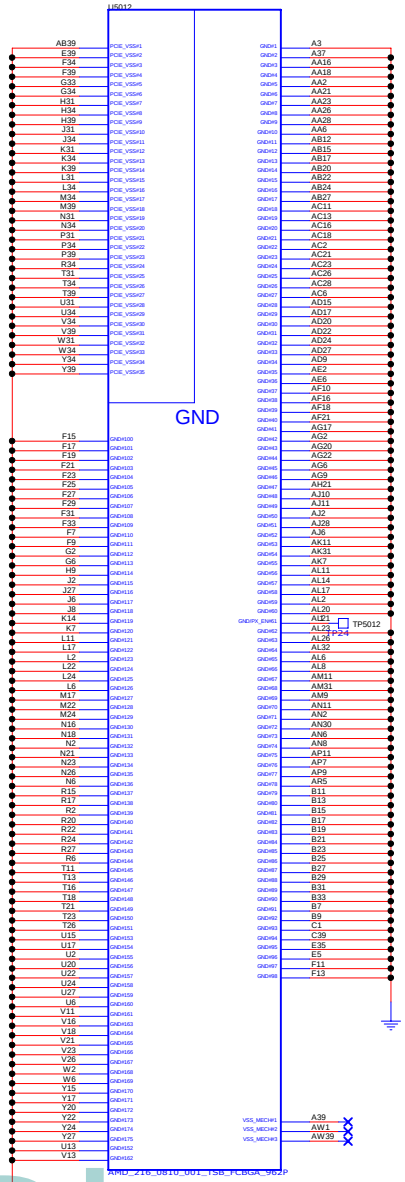

Dr-Bios.com

INVENTEC

TITLE Dakar10ABGP Block Diagram

SIZE	CODE	DOC.NUMBER	REV
C	CS	1310xxxxx-D-D	X01

SHEET 31 of 57

CHANGE by Perry Huang DATE 21-OCT-2002

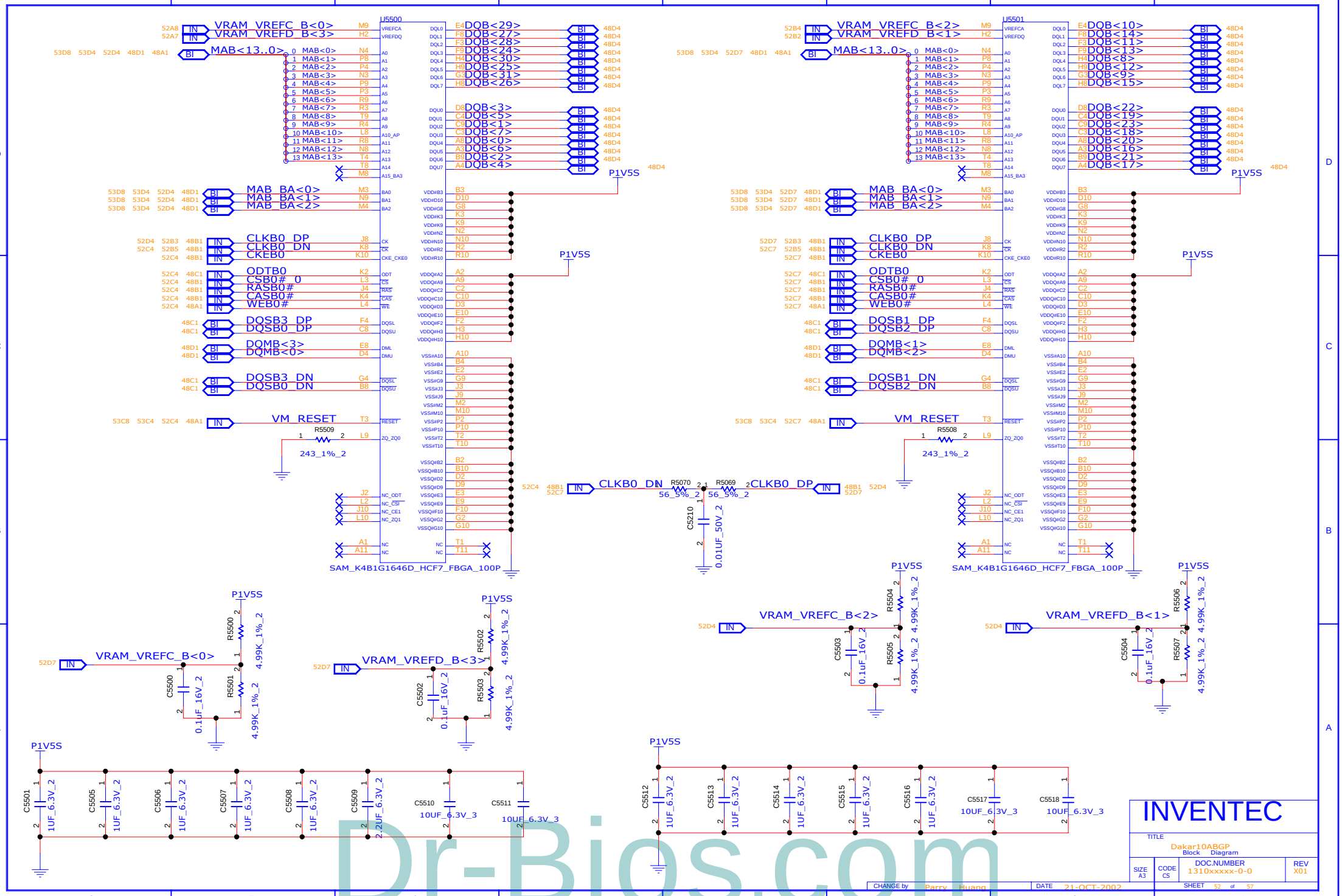
U5500
U5501
VRAM_VREFC_B<0>
VRAM_VREFD_B<3>
VRAM_VREFC_B<2>
VRAM_VREFD_B<1>
MAB<13..0>
MAB_BA<0>
MAB_BA<1>
MAB_BA<2>
CLKB0_DP
CLKB0_DN
CKEB0
ODTB0
CSB0#_0
RASB0#
CASB0#
WEB0#
DQSB3_DP
DQSB0_DP
DQMB<3>
DQMB<0>
DQSB3_DN
DQSB0_DN
DQSB1_DP
DQSB2_DP
DQMB<1>
DQMB<2>
DQSB1_DN
DQSB2_DN
VM_RESET
R5509
243_1%_2
R5508
R5070
R5069
56_5%_2
C5210
0.01UF_50V_2
SAM_K4B1G1646D_HCF7_FBGA_100P
P1V5S
R5500
R5501
R5502
R5503
R5504
R5505
R5506
R5507
4.99K_1%_2
C5500
C5501
C5502
C5503
C5504
C5505
C5506
C5507
C5508
C5509
C5510
C5511
C5512
C5513
C5514
C5515
C5516
C5517
C5518
0.1uF_16V_2
1UF_6.3V_2
2.2UF_6.3V_2
10UF_6.3V_3
INVENTEC
TITLE
Dakar10ABGP
Block Diagram
SIZE A3
CODE CS
DOC.NUMBER 1310xxxxx-0-0
REV X01
CHANGE by Parry Huang
DATE 21-OCT-2002
SHEET 52 of 57

Dr-Bios.com

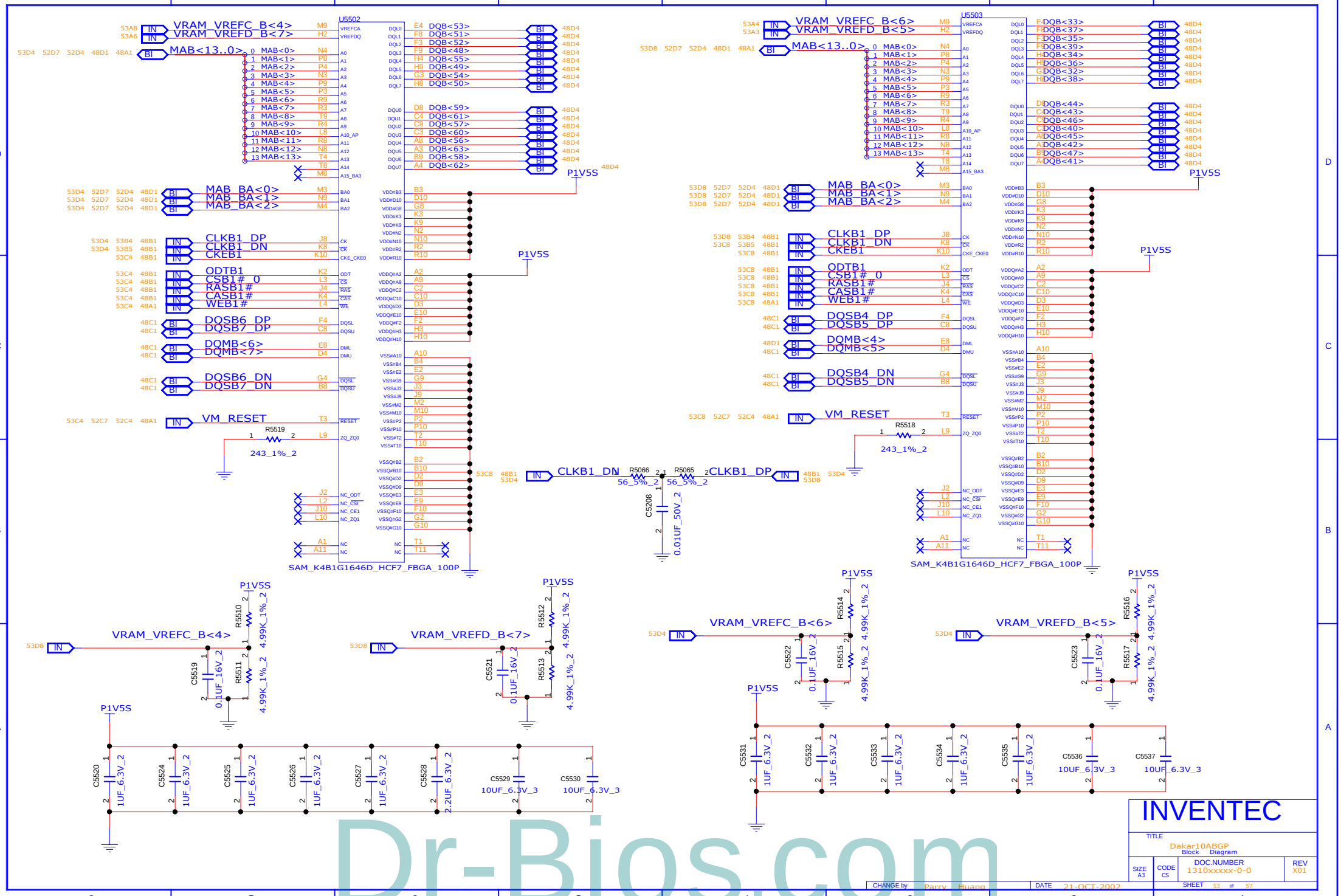
U5502
U5503
SAM_K4B1G1646D_HCF7_FBGA_100P
VRAM_VREFC_B<4>
VRAM_VREFD_B<7>
VRAM_VREFC_B<6>
VRAM_VREFD_B<5>
MAB<13..0>
MAB_BA<0>
MAB_BA<1>
MAB_BA<2>
CLKB1_DP
CLKB1_DN
CKEB1
ODTB1
CSB1#_0
RASB1#
CASB1#
WEB1#
DQSB6_DP
DQSB7_DP
DQMB<6>
DQMB<7>
DQSB6_DN
DQSB7_DN
VM_RESET
DQSB4_DP
DQSB5_DP
DQMB<4>
DQMB<5>
DQSB4_DN
DQSB5_DN
P1V5S
R5519
243_1%_2
R5518
243_1%_2
R5066
56_5%_2
R5065
56_5%_2
C5208
0.01UF_50V_2
R5510
R5511
R5512
R5513
R5514
R5515
R5516
R5517
4.99K_1%_2
C5519
C5521
C5522
C5523
0.1UF_16V_2
C5520
C5524
C5525
C5526
C5527
C5528
C5529
C5530
C5531
C5532
C5533
C5534
C5535
C5536
C5537
1UF_6.3V_2
2.2UF_6.3V_2
10UF_6.3V_3
INVENTEC
TITLE
Dakar10ABGP
Block Diagram
SIZE A3
CODE CS
DOC.NUMBER 1310xxxxx-0-0
REV X01
CHANGE by Parry Huang
DATE 21-OCT-2002
SHEET 53 of 57

Dr-Bios.com

POWER BUTTON

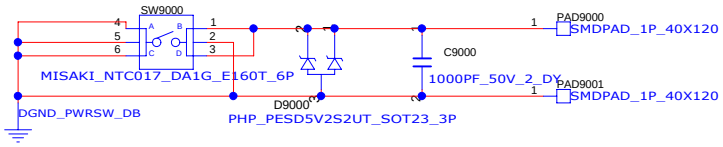

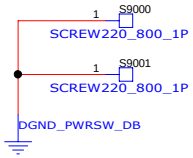

Dr-Bios.com

INVENTEC

TITLE
Dakar10ABGP
Block Diagram

SIZE	CODE	DOC.NUMBER	REV
A3	CS	1310xxxxx-0-0	X01

CHANGE by Parry Huang DATE 21-OCT-2002 SHEET 54 of 57

TPUCH PAD BOARD

TOUCHPAD TO MODULE CONN

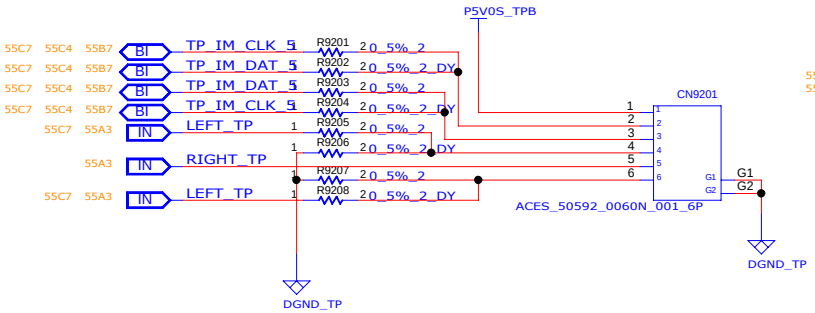

TOUCHPAD TO MB CONN

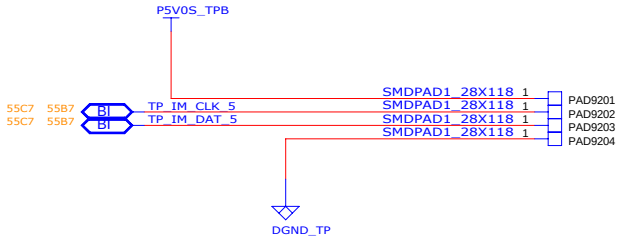

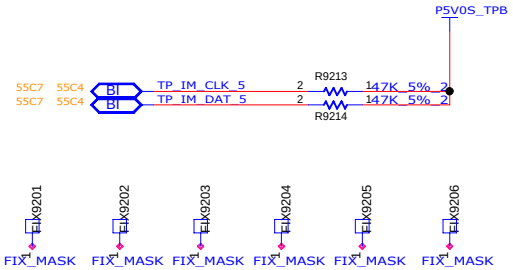

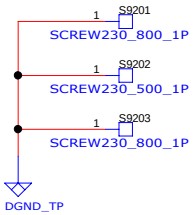

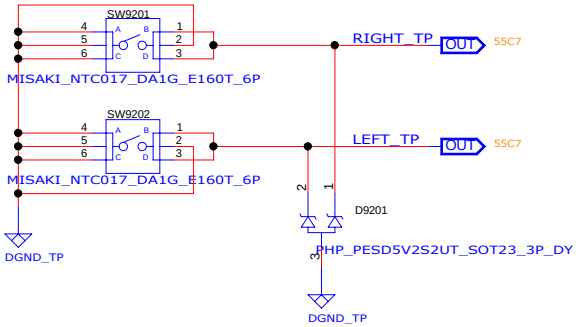

Dr-Bios.com

INVENTEC			
TITLE Dakar10ABGP Block Diagram			
SIZE A3	CODE CS	DOC.NUMBER 1310xxxxx-0-0	REV X01
CHANGE by Parry Huang	DATE 21-OCT-2002	SHEET 55 of 57	

USB BOARD

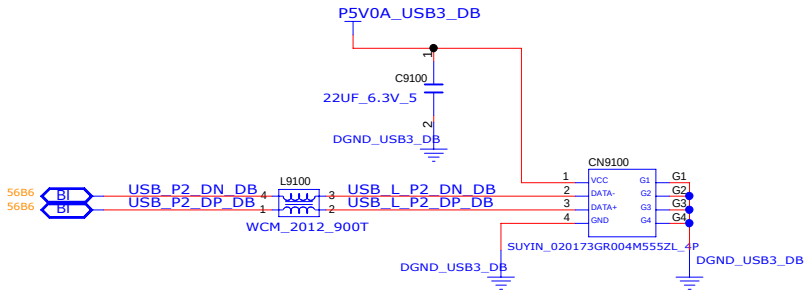

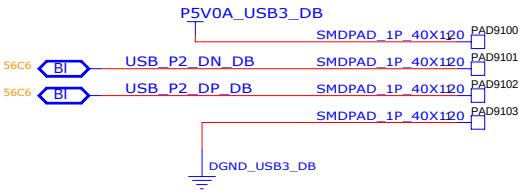

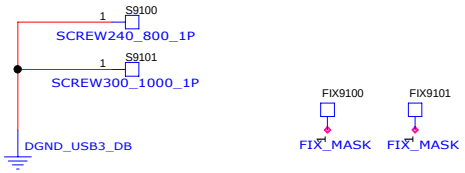

Dr-Bios.com

INVENTEC			
TITLE Dakar10ABGP Block Diagram			
SIZE A3	CODE CS	DOC.NUMBER 1310xxxxx-0-0	REV X01
CHANGE by Parry Huang	DATE 21-OCT-2002	SHEET 56 of 57	

TPUCH PAD 8 PIN BOARD

TOUCHPAD TO MODULE CONN

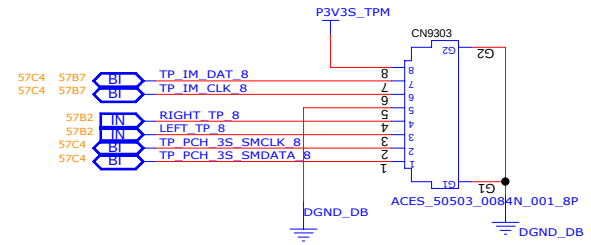

TOUCHPAD TO MB CONN

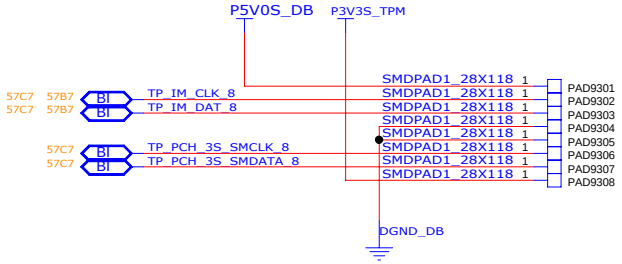

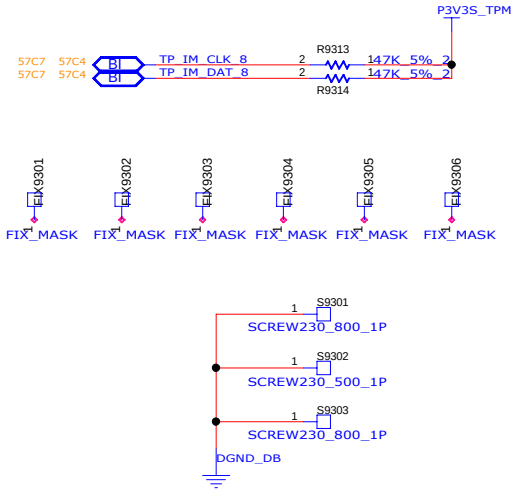

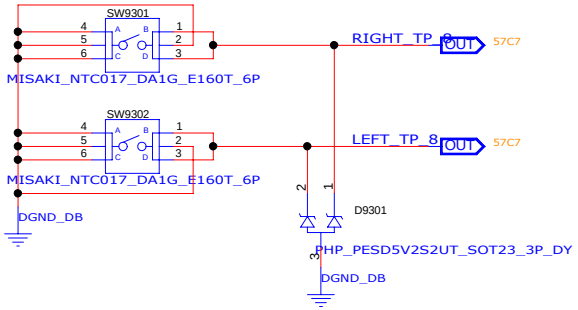

Dr-Bios.com

INVENTEC

TITLE Dakar10ABGP Block Diagram

SIZE	CODE	DOC.NUMBER	REV
A3	CS	1310xxxxx-0-0	X01

CHANGE by Parry Huang DATE 21-OCT-2002 SHEET 57 of 57